02 - DRIVING TORQUES

Contents

CONTENTS

Engine
Engine control unit
Clutch
Gearbox
Propeller shaft
Front differential
Rear differential
Brakes
Suspension and steering
Bodywork

Engine

No.	Description	Torque [Nm]	Notes
1	Screws securing timing chain shoes on crankcase	30	
2	M8 nuts securing engine stands to crankcase	28 ± 10%	
3	Main oil duct closing caps	70	
4	Screws securing connecting rod caps Clamping: torque + angle Check: elongation torque at 60°	 15 + 60° ± 2° 0.115 ± 0.015 mm 55 ÷ 85	Engine oil
5	Oil pump filter M8 nuts	30	
6	M8 nuts securing front cover to oil pump	30	
7	M12 nuts securing crankshaft lower support on crankcase first tightening full tightening	 40 ± 7% 90 ± 3%	 Molycote 1000
8	M8 nuts securing crankshaft lower support on crankcase	30 ± 10%	Molycote 1000 See figure 1 for tightening order
9	M8 screw securing crankshaft lower support to crankcase (timing side)	30 ± 10%	
10	M8 nuts securing timing box to crankcase	30 ± 10%	
11	Timing box to crankshaft screws	28 ± 10%	
12	Cylinder head nuts	108	Molycote 1000 See figure 2 for tightening order
13	Not used		
14	Driving pulley to crankshaft screw	140	
15	Not used		
16	Spark plug caps	80	

No.	Description	Torque [Nm]	Notes
17	Nuts securing camshaft supports on cylinder head	9	
18	Not used		
19	Gear to exhaust timing shaft screws	120	
20	Phase variator on intake timing shaft	90	
21	Phase variator screws	7	
22	Hydraulic tensioners on cylinder head	45	

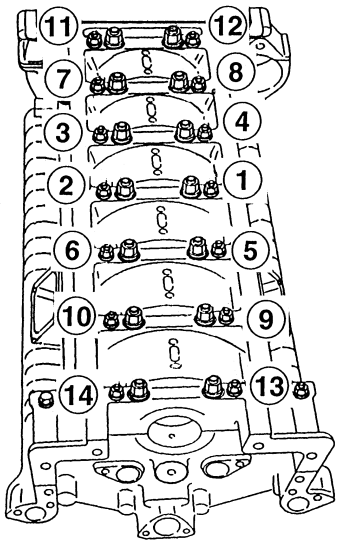

Fig. 1 – Tightening order for M8 nuts on crankshaft support

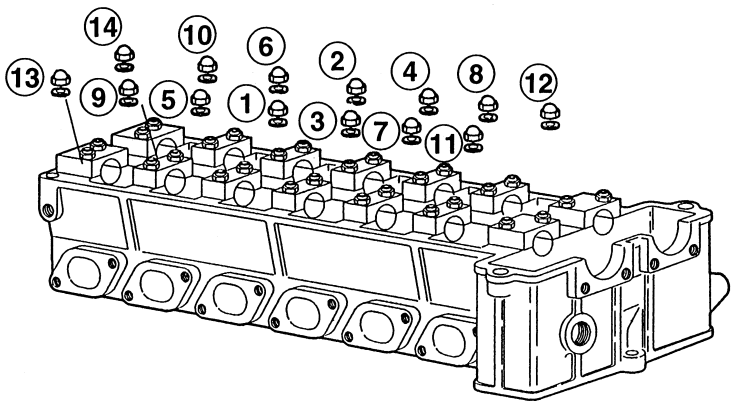

Fig. 2 – Tightening order for cylinder head nuts

Engine control unit

No.	Description	Torque [Nm]	Notes
1	Lambda sensor on exhaust	58.8	
2	Spark plugs	17.6	
3	Delivery couplings on fuel manifold	25 ± 2	
4	Outlet couplings on fuel manifold	25 ± 2	

Clutch

No.	Description	Torque [Nm]	Notes
1	Mechanism to flywheel securing screws approach tightening	- 15.5 ± 5%	Do not lubricate See figure 3: tighten screws 2 (arrow) to obtain H H = 1 ÷ 2 mm See figure 3 for tightening order
2	Thrust block support sleeve nuts	9.25	
3	Flywheel securing screws	39.2	

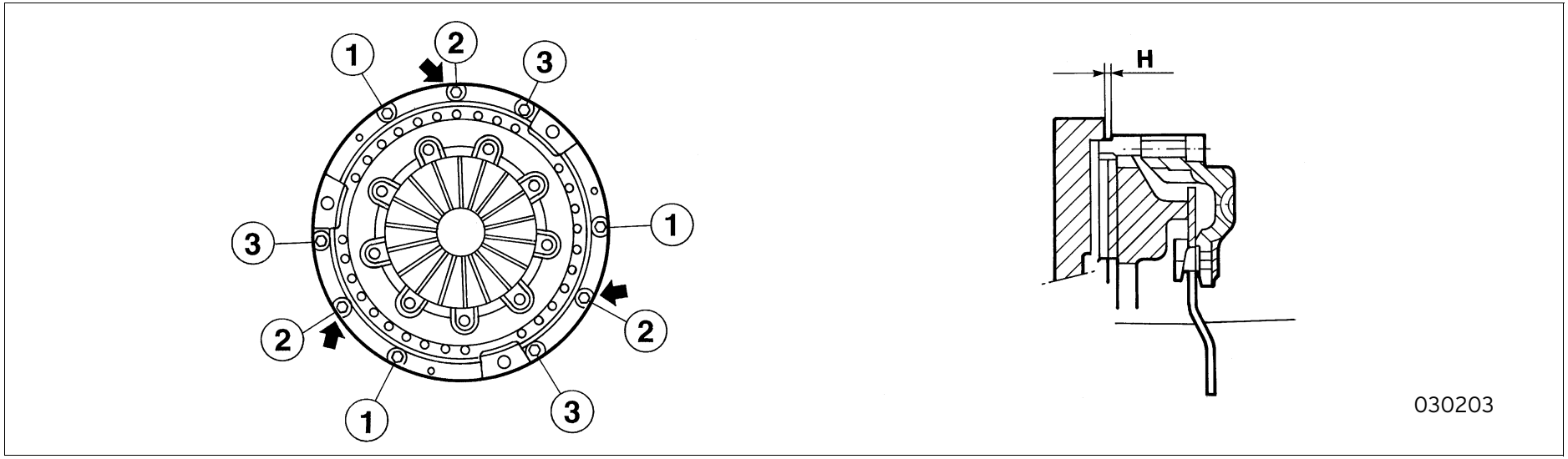

Fig. 3 – Flywheel mechanism tightening

Gearbox

No.	Description	Torque [Nm]	Notes
1	Shift lever housing screws	20	
2	Fork and ratchet screws	29.4	
3	Main /driven shaft idle gear ring-nut	230	Molycote 1000
4	Screws securing clutch bell to engine	25	
5	Transmission gear ring-nut	180	
6	Clutch oil seal flange nuts	9.3	
7	Screws securing clutch bell to gearbox	25	
8	Screws securing gearbox oil pump cover	29.4	
9	Screws securing gearbox oil filter	29.4	
10	Rear driving shaft bearing ring-nut	245	
11	Turret upper support bolt	140	
12	Gearbox upper cover screws	25	
13	Front driving flange nut	176	

Propeller shaft

No.	Description	Torque [Nm]	Notes
1	Propeller shaft flange fastening screws	39	
2	Front differential axle shaft joint fastening screws	39	
3	Rear wheel/differential axle shaft joint fastening screws	69	

Front differential

No.	Description	Torque [Nm]	Notes
1	Differential crown fastening screws	70	Loctite 52A70
2	Differential cover fastening screws	30	
3	Box hub fastening nuts	30	
4	Propeller shaft flange fastening ring	150	Molycote 1000

Rear differential

No.	Description	Torque [Nm]	Notes
1	Differential box cover nuts	50	Molycote 1000
2	Not used		
3	Pinion-pinion set flange fastening screws	30	Loctite 52A70
4	Axle shaft flange fastening screws	91.4	Loctite 641 Molycote 1000
5	Differential crown fastening screws	102	
6	Crown beaaring pre-load flange fastening nuts	40	Molycote 1000

Brakes

No.	Description	Torque [Nm]	Notes
1	Not used		
2	Brake shoe fastening screws	115 ± 5	Loctite 222
3	Hydraulic control fitting on shoe	**18.5 ± 1.5**	Brake oil
4	Brake disc to hub fastening screws		
5	Male ABS control unit hydraulic fitting	12 ± 1	Lubricating oil
6	Female ABS control unit hydraulic fitting	16 ± 2	Lubricating oil

Suspension and steering

No.	Description	Torque [Nm]	Notes
1	Front axle shaft to hub fastening nut	345 ± 5	
2	Front suspension upper arm fastening nut	85 ± 5	
3	Front/rear shock absorber fastening screws	85 ± 5	
4	Rear suspension upper arm fastening nuts	85 ± 5	
5	Front hub bearing fastening ring	490	Loctite 242
6	Suspension arm ball joint housing on pillar	175 ± 5	Loctite 270
7	Steering arm joint fastening nut	44	
8	Front pillar upper/lower joint fastening nut	69	
9	Steering arm joint housing on pillar	62.5 ± 2.5	Loctite 270
10	Lifting system flow separator valve unit fittings	37 ± 0.5	
11	Steering box fastening screws	45	

Bodywork

No.	Description	Torque [Nm]	Notes
1	Windscreen wiper arms		
	Tighten	35	
	Settle	30	