Index

33 - BRAKES

CONTENTS

DESCRIPTION P. 3
Service brake system
Operation
Parking brake

SPECIFICATIONS AND DATA P. 6
Brake disks
Brembo brake calipers
Brake pads
Brake booster
Pump
Parking brake
ABS system

REMOVAL AND REFIT P. 8
Brake pads replacement
Running in the brake pads
Brake calipers removal
Parking brake pads replacement
ABS control unit replacement

VCHECKS AND ADJUSTMENTS P. 12
Brake disks acceptability check
Brake liquid and level
Brake system bleeding
Parking brake lever adjustment
Brake lights and ABS control switch

ABS DIAGNOSTICS P. 16
Lighting up of ABS warning light
Error codes reset 1
ABS system testing
troubleshooting and remedies

DESCRIPTION

Service brake system

The brake system is hydraulically controlled with brake booster and ABS. The system components are:

- four disk brakes
- hydraulic pump with brake booster
- ABS electro-hydraulic control unit
- brake liquid reservoir with "level low" indicator
- vacuum tank

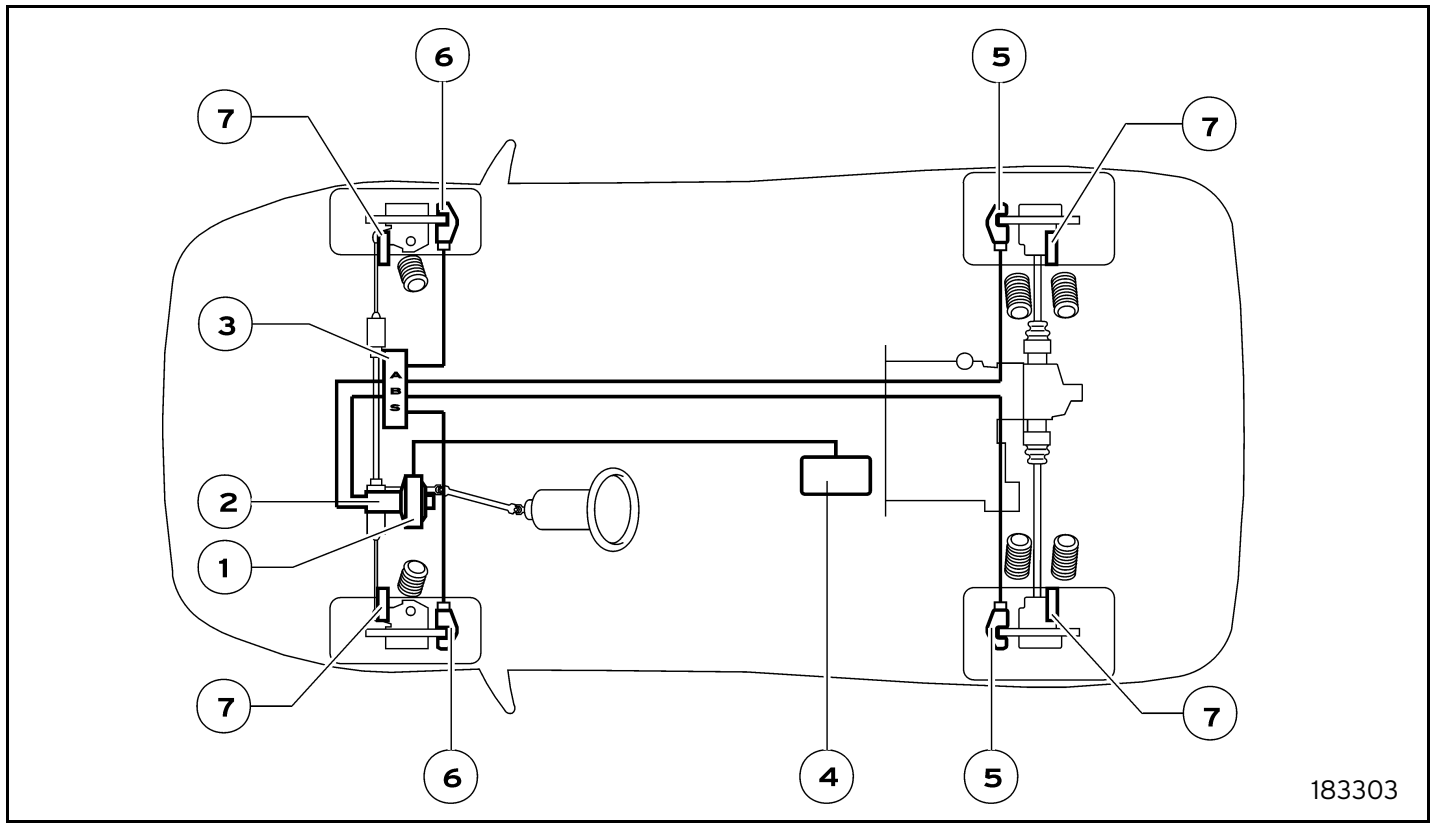

1 Pump brake with brake
2 Brake liquid reservoir
3 ABS electro-hydraulic control unit
4 Vacuum tank
5 Rear brake calipers
6 Front brake calipers
7 Wheel speed sensors (pick-up)

Fig. 1 - Brake system layout

Operation

The electro-hydraulic control unit monitors brake liquid pressure on each separate wheel. The control unit corrects the braking action according to the speed of each wheel, detected by the pick-up sensors.
To ensure the quality of the signal the distance between the pick-up sensor and the phonic wheel must be 0.9 to 1.0 mm.
The electro-hydraulic control unit performs braking corrections by means of 4 ISO valves and 4 dump valves. When an ISO valve is closed, the corresponding caliper is disconnected from the hydraulic pump and the dump valve discharges the circuit pressure from the corresponding brake caliper.
If the ABS warning light on the dashboard switches on, accompanied by the beeper, during normal driving, then the ABS control unit has detected a fault. When the warning light is lit the ABS system is inhibited, i.e. the brakes function normally but without electronic braking action control.

Parking brake

The parking brake operates on the rear wheels.

The calipers acting on the disks of every wheel are controlled by two steel cables through two pulleys and a rocker arm that ensures a uniform distribution of force.

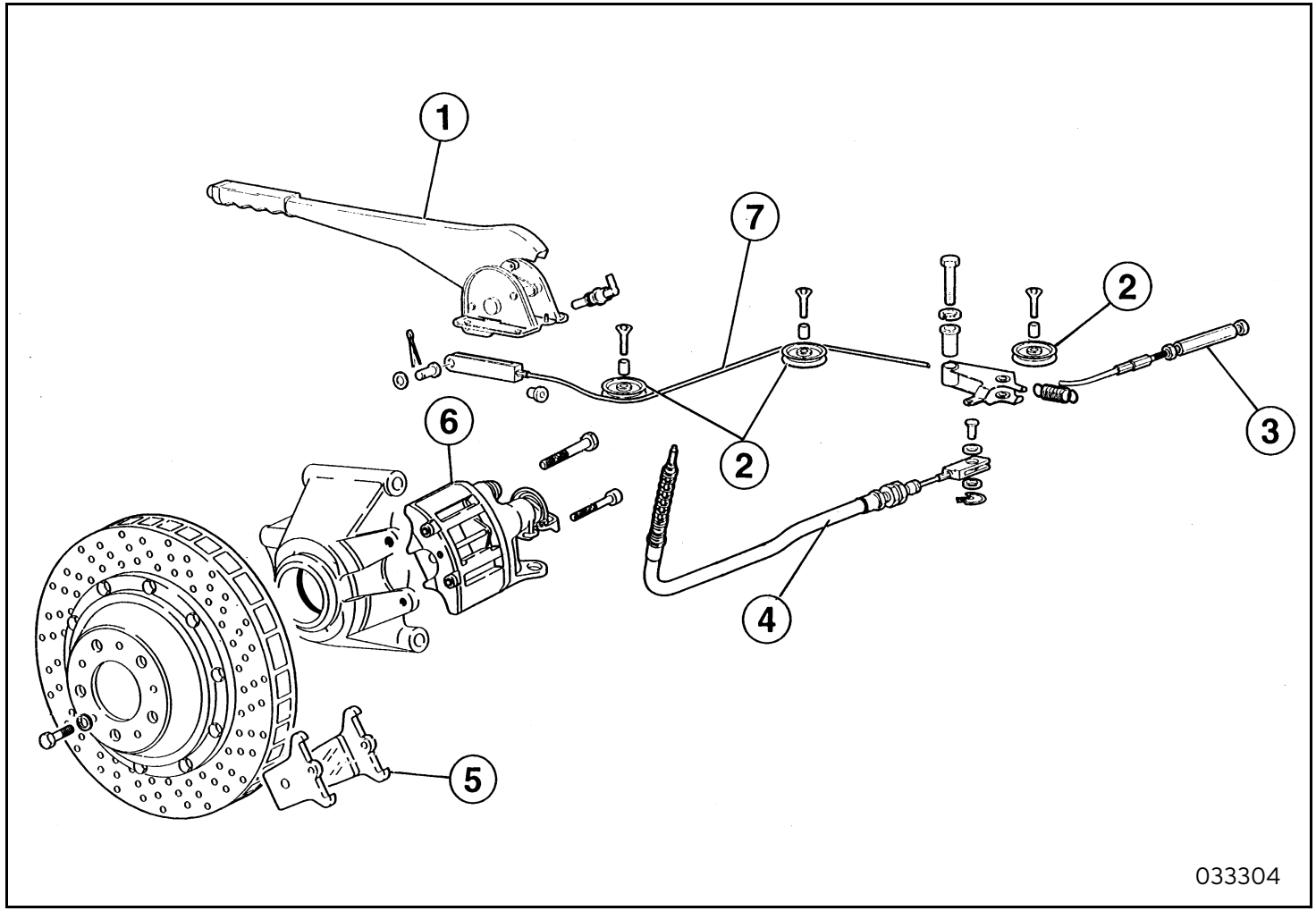

1 Hand brake lever
2 Pulley
3 Tie rod adjster
4 Left-hand tie rod
5 Brake pads
6 Caliper
7 Centre tie rod

Fig. 2 - Parking brake

SPECIFICATIONS AND DATA

Brake disks

	Front	Rear
Diameter	355	335
Nominal thickness	32.1	32.1
Minimun allowed thickness after re-facing	30	30
Parallelism tolerance of two disk faces	0.015	0.015
Max. surface roughness	1.6 µ	

Brembo brake calipers

Type	4 wheel cylinders	
Wheel cylinder bore	46 to 38	40 to 36
Pressure distributor ratio	0.6	
Activation pressure	30 bar	

Brake pads

Pagid type	RS4-2	
Thickness when new	18	18
Minimum allowed thickness	7	7

Brake booster

Type	Vacuum
Wheel cylinder bore	9" V4 PDI

Pump

Type	in tandem
Wheel cylinder bore	15/16"
Front wheel cylinder stroke	25.5 + 10

Parking brake

Type	Disk type on rear wheels with mechanical control by hand lever
Caliper cylinder bore	36
Pads	Frendo 222
Thickness when new	10
Minimum thickness allowed	5.5

ABS system

Type	LUCAS Varity EBC430
Channels	Four

REMOVAL AND REFIT

Brake pads replacement

We suggest to replace the pads on all wheels and to use original pads only.
The procedure is the same for front and rear brakes.

- disconnect the electrical connection (1) of the wear indicator;
- remove the clamps (3)
- take out the pins (2) and remove the anti-vibration spring (4);
- take out the pads keeping the wear indicator cable, then push the pistons inwards;
- fit the new pads, fitting the wear indicator cable in its seat;
- re-assemble following the procedure in reverse order.

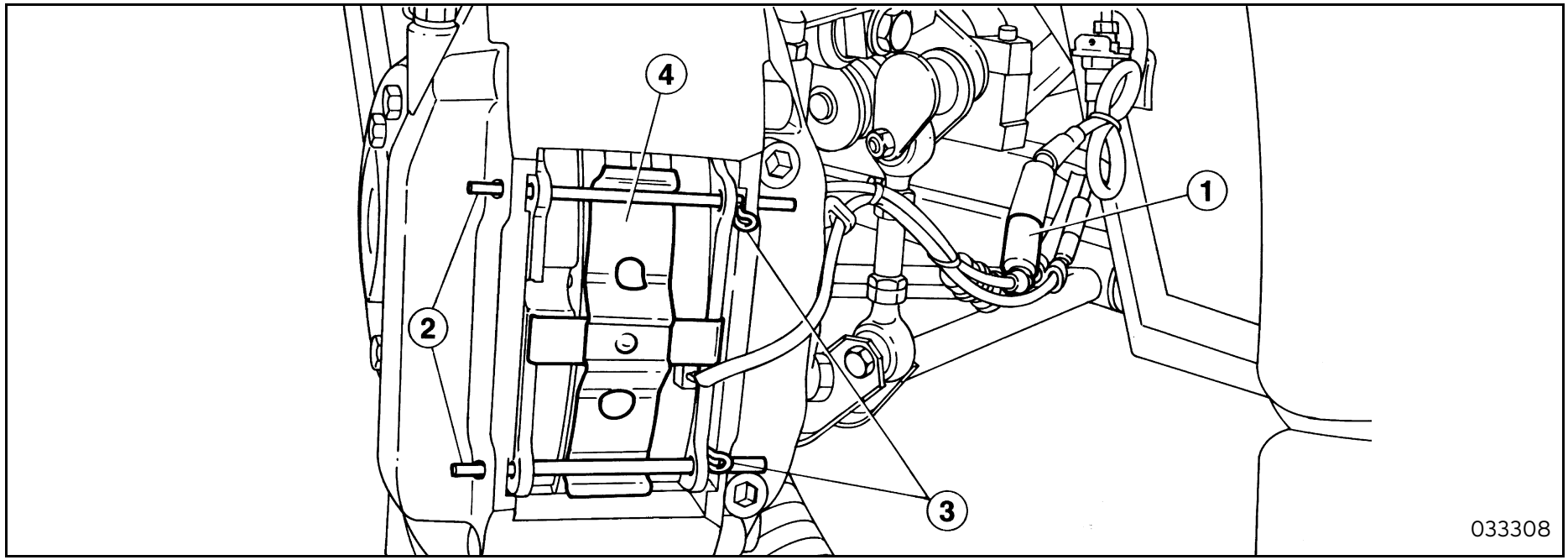

Fig. 3 - Brake pad replacement

Running in the brake pads

The operations described are to be carried out under conditions that permit the car to reach the speed indicated.

After replacement it is advisable to run the pads in so that they adapt to the vehicle.
Proceed as follows:
- brake five or six times with a slight pressure on the pedal, decelerating from 150 Km/h to 100 Km/h. After each deceleration allow the brakes to cool for about 500 meters.
- brake with a medium pressure on the pedal decelerating from 180 Km/h to 100 Km/h.
- subsequently brake twice with a light pressure on the brake to clean the disk surfaces. Repeat this operation three times.
- progressively increase the pace until all the pads are completely bedded.

Brake calipers removal
Proceed as follows:
- put the car on a lifting hoist;
- remove the relevant wheel;
- unscrew the fixing screws and remove the brake caliper from the hub holder taking care not to remove the brake hoses. Tie the caliper to the chassis taking care not to bend the brake hose too much;
- carefully clean the caliper-disk assembly before reassembling.

Do not use petrol or other solvents for cleaning as this could damage the wheel cylinder seal rings.

- after carefully cleaning the screws, apply a film of “Loctite 242” or “Arexons 52A 42” then tighten them to the prescribed torque.

Parking brake pads replacement

The instructions are valid for both rear wheels.

- put the car on a lifting hoist;
- remove the rear wheel;
- remove the two screws (1) that fix the brake caliper (2) and remove it from the disk recovering the centring wheel cylinder and the pads (3);
- replace the gaskets and reset the backlash device;
- after refitting all the parts, operate the control lever a few times to activate the automatic backlash device.

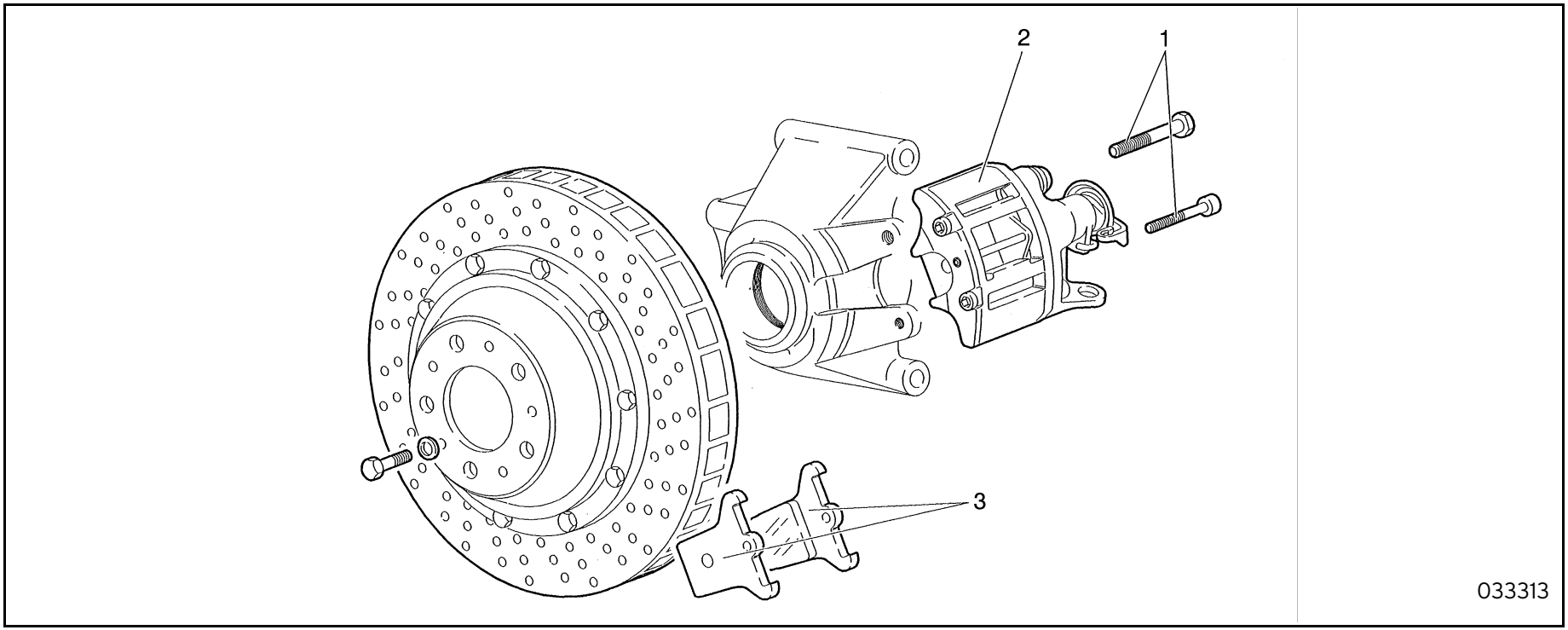

Fig. 4 - Parking brake pads removal

ABS control unit replacement

The electro-hydraulic control unit is located inside the front bulkhead. To remove, disassemble the entire unit which is located under the brake pump.

Before detaching the connector from the control unit make sure the battery isolator is set to OFF then slide the safety fastener towards the left. Do not attempt to remove the connector when the fastener is still fitted or damage to internal contacts will result.

Unscrew the hoses from the unions on the hydraulic unit; make a note of the relative positions to facilitate re-assembly.

Unscrew the three screws securing the ABS control unit to the chassis and remove the group complete with its support. To disassemble the support unscrew the two pins at the sides of the control unit.

Do not attempt to separate the electronic and hydraulic parts of the control unit.

During the above procedures take measures to keep dirt and debris out of the open ends of disconnected tubes. Tube connections should be plugged for protection.

When reassembling the control unit observe the correct connection sequence of the hoses; refer to the markings stamped on the hydraulic unit.

If it is necessary to replace the ABS system electro-hydraulic unit, to assist tracing the required part use the number stamped on the hydraulic unit (1) and on the electronic unit plate (2).

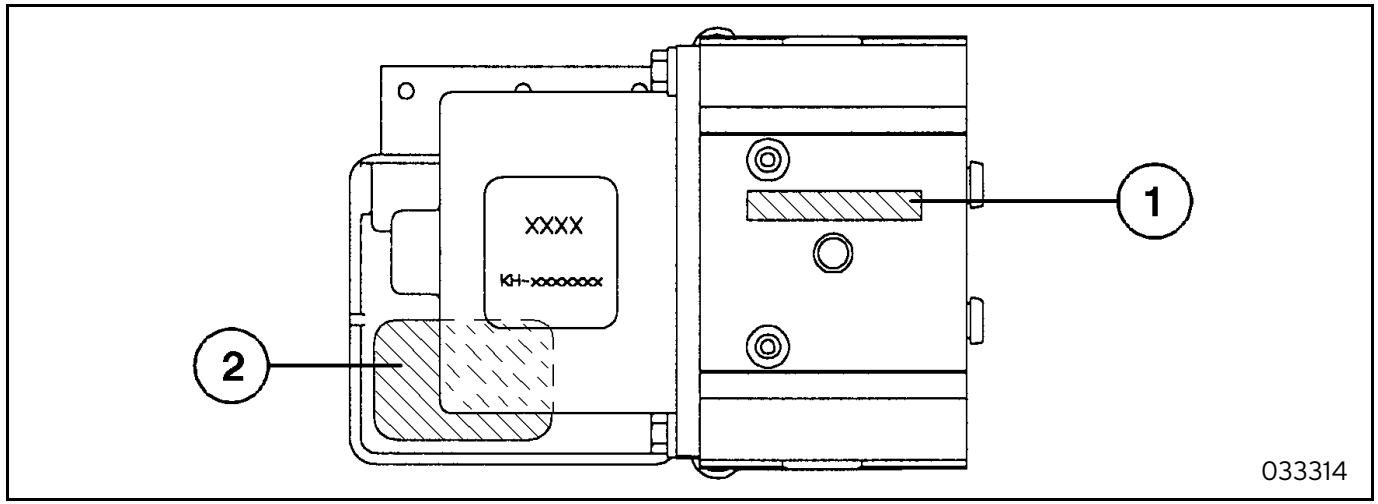

XX:	two characters indicating type of ABS
xxxxxxxx :	eight characters indicating the serial number
XXX:	three free character spaces
xxxxxxxxx:	nine characters for the serial number
xxxxx:	five free character spaces

Fig. 5 - Identificatio plates

CHECKS AND ADJUSTMENTS

Brake disks acceptability check

This check is to be carried out whenever the pads are replaced and after any servicing operation (see Routine Maintenance Schedule).

Proceed as follows:
- Using an emery cloth, carefully clean the disk surface removing any abrasive material from holes and slots;
- Visually check the condition of each disk, paying particular attention to the inside and outside diameter areas and the holes.

The disk is to be replaced in these cases:
- Cracks measuring over 5 mm on the braking band (b);
- Cracks of any size on the inside or outer diameters (a),
- Cracks of any size on the mounting holes of brake disks with aluminium bell (a);
- Wear on the upper braking band that exceeds 2 mm (1 mm per side);
- Scoring that could interfere with the correct pad/disk contact.

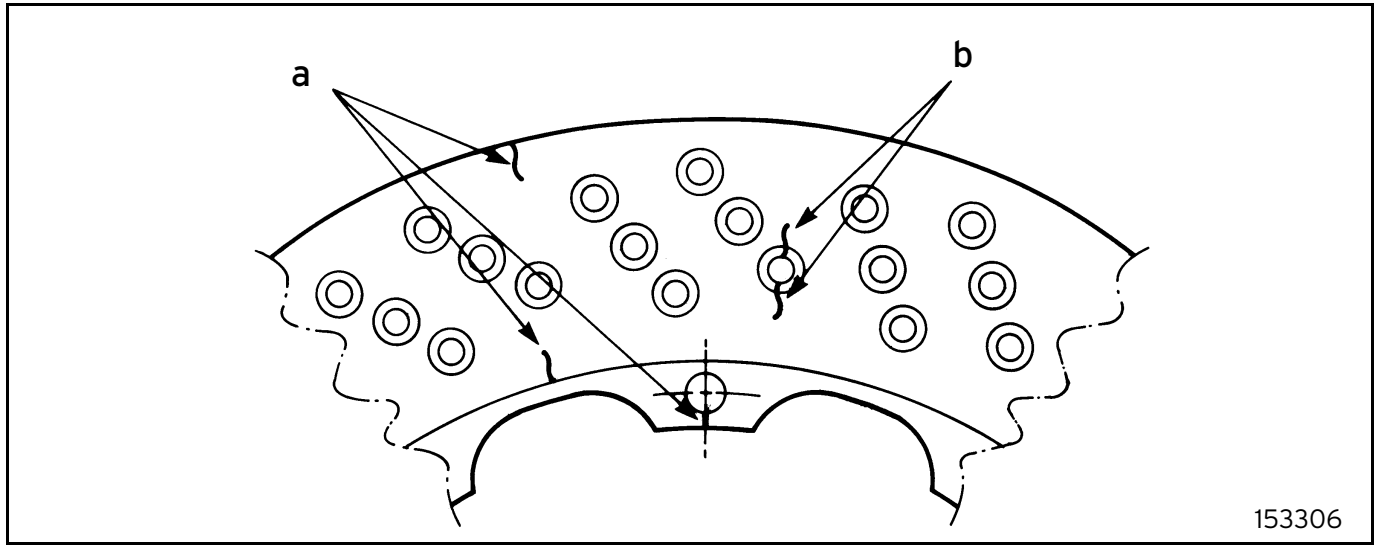

(a): no cracking allowed
(b) crack maximum length 5 mm

Fig. 6 - Brake disk check and acceptability

Brake liquid and level

The level of the brake liquid must always be between the notches indicating MAX and MIN on the tank.
The tank is provided with two floats that indicate when the level is under the minimum for both front and rear circuits.
To reach the brake pump tank, remove the upholstery panel of the front compartment. When topping up use only the prescribed liquid and introduce with a perfectly clean dry syringe. Ensure that the liquid is uncontaminated and comes from a sealed can.

If the low level warning light comes on, always check the actual wear on the pads before replacing them.

Brake system bleeding

- start the bleeding from the front brakes.
- relieve the external screws, and then the interior screws of the right and left brake calipers.
- repeat the same operations for the rear brake calipers.
- to top up the brake liquid, always use liquid coming from sealed cans.

After bleeding, the brake pedal should not be flexible.

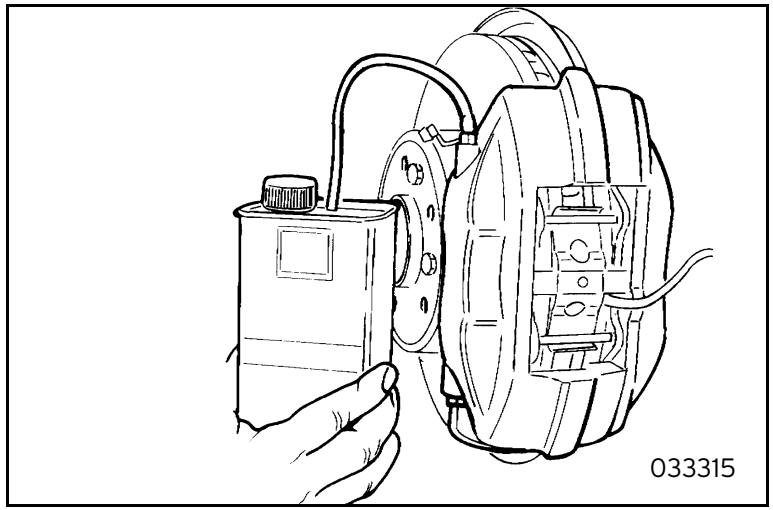

Fig. 7 - External side

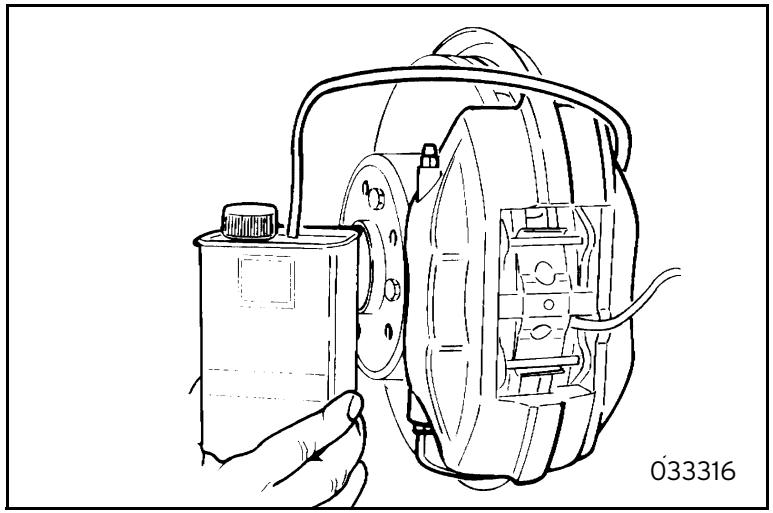

Fig. 8 - Internal side

Parking brake lever adjustment
Operate on the right tie-rod register A until the right wheel locks, then unscrew it by at least two turns;

The wheel must turn freely with no rubbing between shoes and brake disk.

- keeping the rocker arm rested repeat the operation on the left brake tie-rod.
- operate on the control lever in the passenger compartment:
- it is operating correctly if the car is braked after 3-4 clicks of the lever;
- if it is not, operate on the tie-rod registers again to obtain the correct lever stroke.

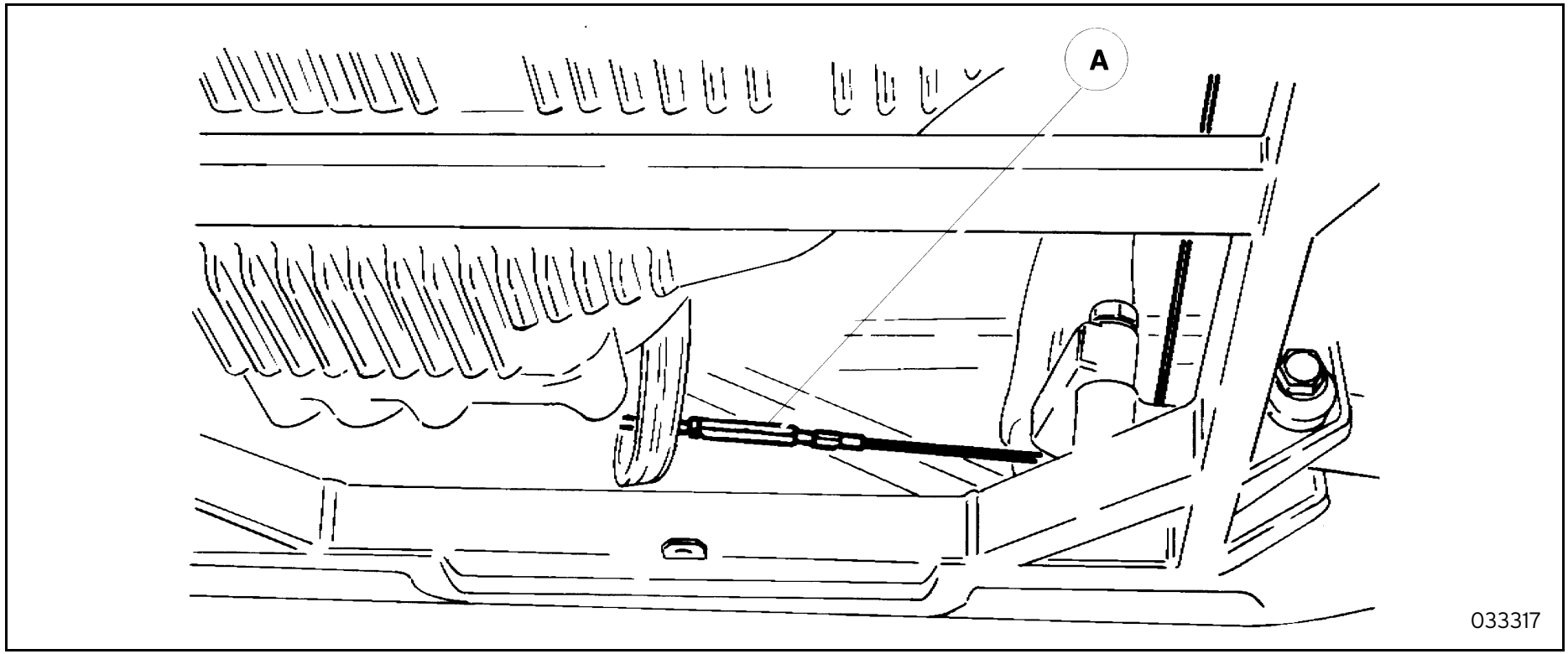

Fig. 9 - Parking brake lever adjustment

Brake lights and ABS control switch

The brake lights/ABS switch is located inside the passenger compartment, where it is mounted to the foot pedals on a bracket.
Position adjustment of this component is critical: ensure that the switch is open when the pedal is in the rest position (simply check whether or not the brake lights are on).
The brake lights should come on following pedal travel of 2 - 2.5 mm measured in the pedal area directly opposite the switch.
If the switch is incorrectly adjusted or damaged, the control unit acknowledges the situation by generating the relative error message: stuck or inoperative brake switch.

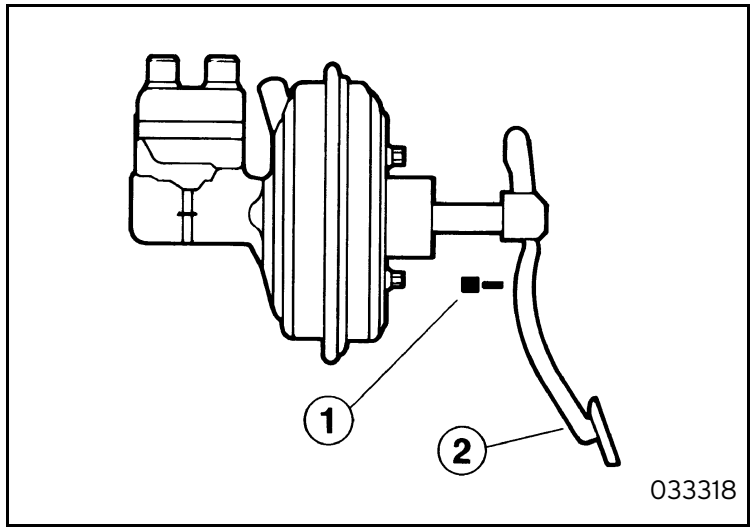

Fig. 10 - Brake switch

1 Brake/ABS switch
2 Adjustment

ABS DIAGNOSTICS

ABS diagnostics are performed by computer using the OBDII interface. Correct operation of the system can be restored with the help of the troubleshooting table at the end of the manual.

It is important to remember that if the dashboard warning light comes on and/or the beeper sounds at the same time, the ABS system is not operational. Therefore braking is no longer under electronic control and is fully controlled by the driver. Avoid sudden violent braking as this could cause the wheels to lock.
Furthermore, in this situation braking is no longer moderated by the electro-hydraulic control unit.

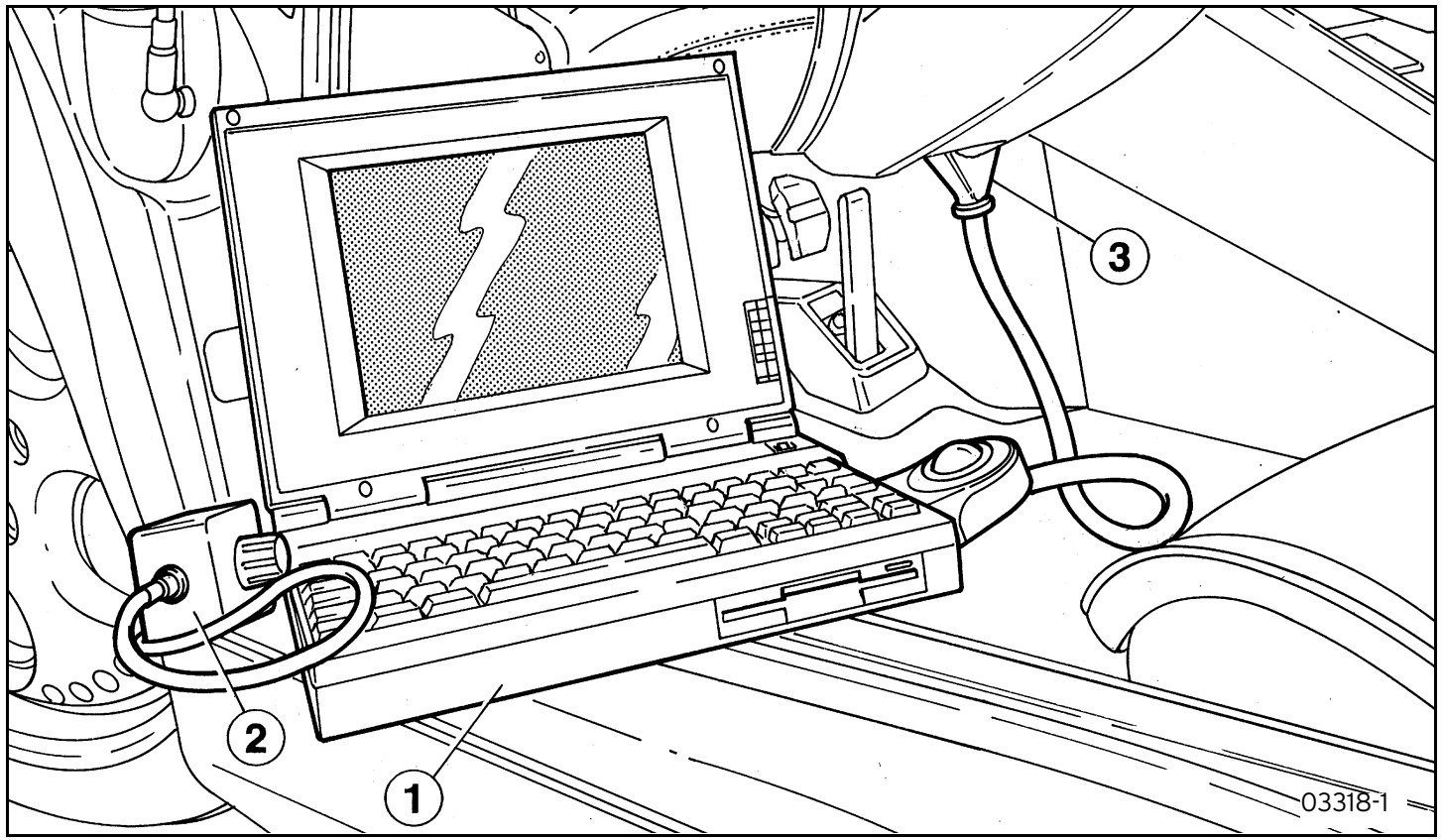

1 Computer
2 ABS/AIRBAG switch
3 OBD II connector

Fig. 11 - ABS diagnostics connection

Lighting up of ABS warning light

If the ABS warning light on the dashboard comes on and/or at the same time the beeper sounds, the ABS control unit has detected a fault in the system. In this case the system must be checked as soon as possible.

Proceed as follows to diagnose the problem:

1 Switch on the computer.
2 Connect the RS232 interface first to the computer serial port COM1 and then to connector OBDII. This connector is located under the instrument panel on the driver side towards the central tunnel. Set the interface selector to ABS.
3 Connect the battery isolator and turn the ignition key to ON.
4 Launch the ABS program as follows: in MS-DOS open the directory abs (CD C:\ABS), type ABS and then press ENTER; in WINDOWS 95 double click the ABS icon.
5 The program will open communications with the ABS control unit. A screen is displayed (fig. 11) showing a list of the errors detected on the ABS control unit on the left. In addition to the error message an X will be displayed beneath the Present column or beneath the History column. If the X is only beneath the History column then the relative fault is intermittent.
6 After identifying the faults consult the troubleshooting table. If a mechanical repair on the system is necessary, read the following chapters in which all components of the ABS system are described.
7 Exit from the diagnostic program by pressing Q. Enter N in reply to the prompt: "Edit output file?"
8 Repair the ABS system then reset the control unit. If the problems have been solved all error messages should now be displayed under History.

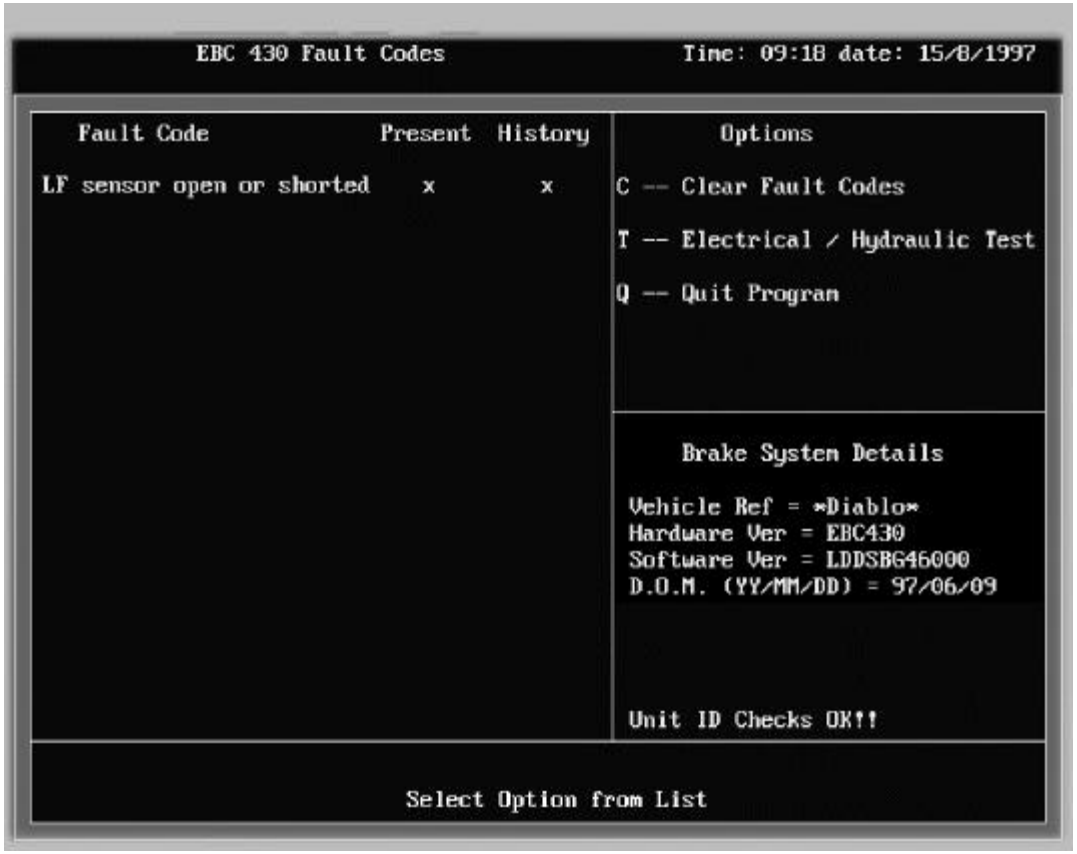

033319

Fig. 12 - ABS diagnosis screen

Error codes reset

After solving the ABS system problems the previous error codes must be reset.
Proceed as follows:

1 Switch on the computer.
2 Connect the RS232 interface first to the computer serial port COM1 and then to connector OBDII. This connector is located under the instrument panel on the driver side towards the central tunnel. Set the interface selector to ABS.
3 Connect the battery isolator and turn the ignition key to ON. The ABS warning light will remain on after the lamp test, and the beeper will sound.
4 Launch the ABS program as follows: in MS-DOS open the directory abs (CD C:\ABS), type ABS and then press ENTER; in WINDOWS 95 double click the ABS icon.
5 The program will open communications with the ABS control unit. A screen will be displayed showing a list of the errors detected on the ABS control unit. If the errors have been solved they should be the same as those detected during the previous diagnostics routine, but this time displayed under History.
6 All errors can now be reset by pressing C. All error codes should be erased from the screen. Any remaining error codes refer to errors that are still present in the system.
7 If repair work performed on the ABS system regards electrical or hydraulic parts, the entire system must be tested. The procedure for testing the ABS system is described in the next chapter. To perform the test there must be no error codes active on the control unit.
8 Quit the diagnostic program by pressing Q. Type N in response to the prompt: “Edit output file?”.

ABS system testing

The test procedure ensures that the ABS system is functioning correctly after the replacement of faulty components. The procedure comprises three electrical connection tests and two hydraulic connection tests.

- Electrical tests

Wiring test

This test checks for possible installation errors by ensuring that the ABS control unit acknowledges each wheel correctly.

Low speed test

Check that minimum pick-up sensor reading speed is 7 Km/h (or lower).

Brake switch test

There is a switch located on the brake pedal that informs the ABS control unit when the pedal is pressed. It is therefore extremely important to check the efficiency of this component to guarantee that the ABS control unit is activated during braking.

- Hydraulic tests

Hydraulic connection test

The configuration of hydraulic connections between the electro-hydraulic unit and the braking circuit is obligatory. During installation observe the inscriptions on the hydraulic unit to eliminate the risk of error. If hydraulic connections are inadvertently confused the car may become uncontrollable when the brakes are applied.

Checking hydraulic ducts

To ensure that all ducts in the braking circuit are unobstructed a check must be carried out to ensure that the pressure reaches the brake caliper and that the caliper can discharge the pressure completely whenever necessary.

This procedure describes all the phases involved in checking the ABS system. The tests must be performed by two persons and only when there are no Error codes present.

1 Switch on the computer.
2 Connect the RS232 interface first to the computer serial port COM1 and then to connector OBDII which is located under the driver side instrument panel towards the central tunnel. Set the interface selector to ABS.
3 Connect the battery isolator and then turn the ignition key to ON.
4 Launch the ABS program as follows: in MS-DOS open the directory abs (CD C:\ABS), type ABS and then press ENTER; in WINDOWS 95 double click the ABS icon.
5 The program now opens communications with the ABS control unit. The ABS warning light switches on and the GFA unit beeper sounds for 20 seconds and then mutes for 1 minute. Warning light and beeper must remain active for the full duration of the diagnostics.

6 The error screen is now displayed. Note that the control unit must have already been reset, i.e. there must be no error codes present or the test routine will give unreliable results.
7 Fit the exhaust gas extraction system, sit inside the car with the computer and raise the wheels off the ground. Start the engine.
8 The person assisting with the test should now perform the Electrical connections test.
9 Disconnect the pick-up sensor of the front lefthand wheel and check that the following message is displayed:
LF (left front) sensor open or shorted
10 Reconnect the front left wheel pick-up sensor.
11 Disconnect the pick-up sensor on the front right-hand wheel and check for the message:
RF (right front) sensor open or shorted
12 Reconnect the front right wheel pick-up sensor.
13 Disconnect the pick-up sensor on the rear left-hand wheel and check for the message:
LR (left rear) sensor open or shorted
14 Reconnect the rear left wheel pick-up sensor.
15 Disconnect the pick-up sensor on the rear right-hand wheel and check for the message:
RR (right rear) sensor open or shorted
16 Reconnect the right rear wheel pick-up sensor.
17 If a message relative to a different sensor with respect to the one disconnected appears, the electrical wiring is incorrect.
18 Reset the four errors created by means of the above procedure by pressing "C".
19 Now press "T" to start the electro-hydraulic test.
20 Enter vehicle data in the program. To use the data mask relative to the previous diagnostic routine, press Y; to run a diagnostic routine relative to another car, press N.
21 If N is selected, the program will prompt for the vehicle model. Select the car from the available models using the UP (Ø) and DOWN (Ø) keys and press ENTER. Enter the V.I.N. (Vehicle Identification Number) and press ENTER. Now enter the ABS control unit and Brake unit serial number and press ENTER. Press the Space Bar to proceed.
22 A screen containing a schematic view of the car will appear with the message: "Brake switch adjustment Test" at the top left and at the bottom of the screen a message indicating that the computer is waiting to run the Brake switch test.
23 Press the brake pedal gently so it is depressed by about 2 mm and check that the brake lights change to red on the screen.

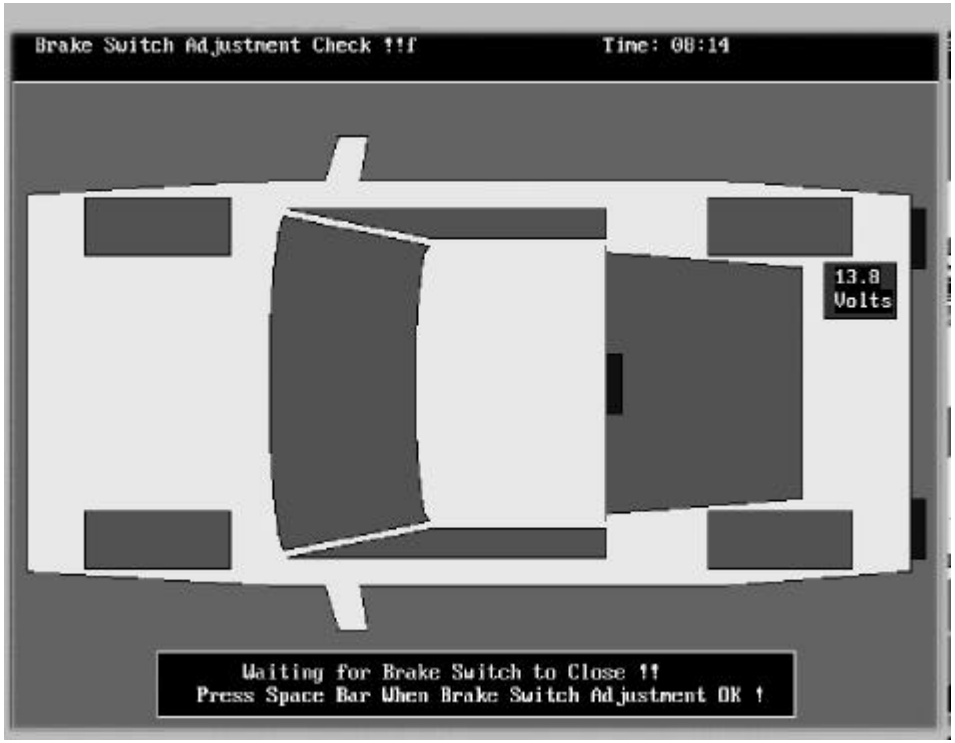

033320

Fig. 13 - Brake switch test

24 Release the pedal, the brake lights should return to blue. If the brake switch is correctly adjusted, i.e. it operates after approx. 2 mm pedal travel, go on to the next step.
25 Press the Space Bar to get the following screen:

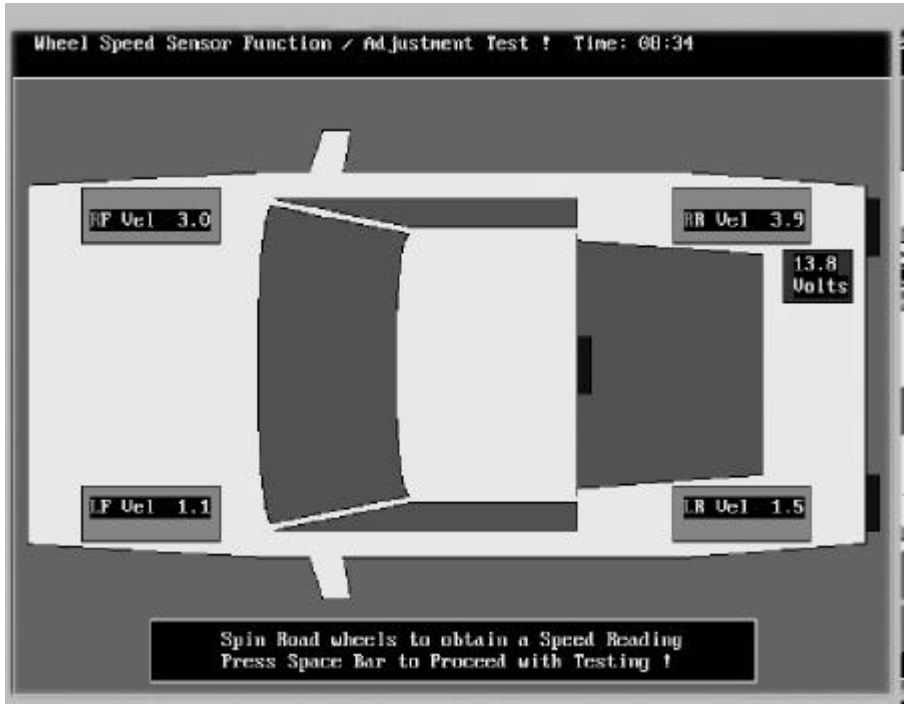

033321

Fig. 14 - Low speed test

26 The caption "Wheel Speed sensor Function / Adjustment test" at the top left of the screen indicates the start of the Low speed test.
27 The engine is already running, so just engage first gear without pressing the accelerator. The display will give an equivalent road speed of around 10 Km/h.
28 Now select "idle" and allow the wheels to coast. The wheel speed will continually decrease until they come to a stop; during this phase the program will calculate the minimum reading speed of the pick-up sensors and show it on the display. The car is not a 4x4 model, so only the rear wheels will turn when it is in gear; therefore, spin the left-hand front wheel manually until it reaches the equivalent of 10 Km/h before releasing it and allowing it to coast to a stop. Repeat the same operation for the right-hand front wheel.
29 The test is concluded when all the wheels are displayed in red and associated with a speed value.

30 The next phase is the Hydraulic connections test. Before starting, read the operations to be performed on each wheel to ensure you do not exceed the 60 sec. time-out period (the time-out situation is discussed after all the wheel tests).

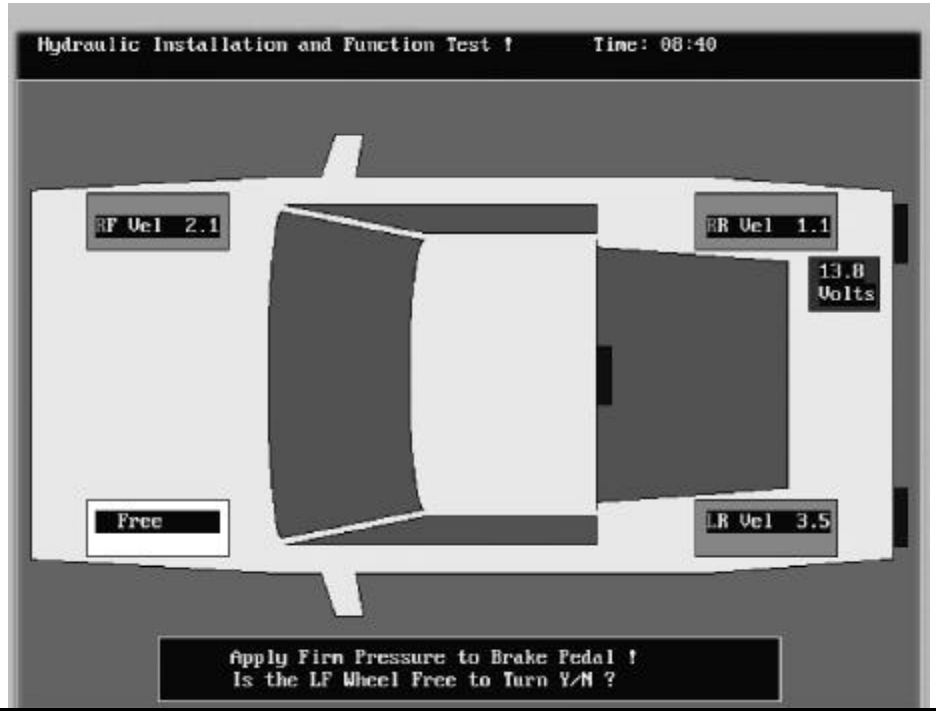

033322

Fig. 15 - Test connessioni idrauliche

31 Press the Space Bar to open the next screen, and also to start the test for the front left wheel (Hydraulic installation and function test). Perform the next 5 operations as quickly as possible so that the time-out period is not exceeded.

32 The wheel to be tested will be displayed on the screen in white. Press the brake pedal firmly.

33 Check that the front left wheel is free, while the other wheels are locked. If the wheel is free, press Y (caption FREE displayed on wheel).

34 Check that the front left wheel is locked, if so press Y (caption LOCKED displayed on wheel).
35 Check that the front left wheel is free, if so press Y (caption FREE displayed on wheel).
36 Release the brake pedal.
37 Perform the next 5 operations as quickly as possible so that the time-out period is not exceeded.
38 Press the Space Bar to start the test on the front right wheel, which will switch to white on the display. Press the brake pedal firmly.
39 Check that the front right wheel is free while the other wheels are locked. If the wheel is free press Y (caption FREE displayed on wheel).
40 Check that the front right wheel is locked, if so press Y (caption LOCKED displayed on wheel).
41 Check that the front right wheel is free, if so press Y (caption FREE displayed on wheel).
42 Release the brake pedal.
43 Perform the next 5 operations as quickly as possible so that the time-out period is not exceeded.
44 Press the Space Bar to start the test on the rear left wheel, which will switch to white on the display. Press the brake pedal firmly.
45 Check that the rear left wheel is free while the other wheels are locked. If the wheel is free press Y (caption FREE displayed on wheel).
46 Check that the rear left wheel is locked, if so press Y (caption LOCKED displayed on wheel).
47 Check that the rear left wheel is free, if so press Y (caption FREE displayed on wheel).
48 Release the brake pedal.
49 Perform the next 5 operations as quickly as possible so that the time-out period is not exceeded.
50 Press the Space Bar to start the test on the rear right wheel, which will switch to white on the display. Press the brake pedal firmly.
51 Check that the rear right wheel is free while the other wheels are locked. If the wheel is free press Y (caption FREE displayed on wheel).
52 Check that the rear right wheel is locked, if so press Y (caption LOCKED on wheel).
53 Check that the rear right wheel is free, if so press Y (caption FREE displayed on wheel).
54 Release the brake pedal.
55 If the message TIMEOUT has been displayed on any of the wheels, do not press Space Bar because the computer will automatically interrupt the test for 5 minutes. After this interval a message will be displayed prompting to press Space Bar to test the wheel.
56 After the hydraulic connections test press Space Bar to exit the program.
57 The ABS warning light and beeper will now switch off. Enter Y against the prompt: “Edit output file?”.

58 A text editor will now open showing the diagnostic file that has just been generated, filename temp.txt. Hold down ALT and press F. Now select "Save As..." and enter a suitable filename for the archive, e.g. the vehicle chassis number (12811.txt).
59 Exit the text editor by holding down ALT and then pressing F. Select "Esc".

THROUBLESHOOTING AND REMEDIES

Faults	Solutions
LF open or shorted sensor	LF wheel pick-up sensor short circuit or disconnected. Check wiring and connectors.
LF missing sensor or tone ring	No signal from LF wheel pick-up sensor or not reading phonic wheel correctly.
LF sensor drop-out	Signal from LF wheel pick-up sensor is interrupted frequently. Check pick-up sensor and mounting.
RF open or shorted sensor	RF wheel pick-up sensor short circuit or disconnected. Check wiring and connectors.
RF missing sensor or tone ring	No signal from RF wheel pick-up sensor or not reading phonic wheel correctly.
RF sensor drop-out	Signal from RF wheel pick-up sensor is interrupted frequently.
LR open or shorted sensor	Check pick-up sensor and mounting.
LR missing sensor or tone ring	LR wheel pick-up sensor short circuit or disconnected. Check wiring and connectors.
LR sensor drop-out	No signal from LR wheel pick-up sensor or not reading phonic wheel correctly.
RR open or shorted sensor	Signal from LR wheel pick-up sensor is interrupted frequently. Check pick-up sensor and mounting.
RR missing sensor or tone ring	RR wheel pick-up sensor short circuit or disconnected. Check wiring and connectors.
RR sensor drop-out	No signal from RR wheel pick-up sensor or not reading phonic wheel correctly.
LF shorted DMP or open driver	Signal from RR wheel pick-up sensor is interrupted frequently. Check pick-up sensor and mounting.
LF open DMP or shorted driver	LF wheel DMP valve driver short circuit or jammed open. Check wiring or replace control unit.

Faults	Solutions
LF shorted ISO or open driver	LF wheel DMP valve driver disconnected or jammed closed. Check wiring or replace control unit.
LF open ISO or shorted driver	LF wheel ISO valve driver short circuit or jammed open. Check wiring or replace control unit.
RF shorted DMP or open driver	LF wheel ISO valve driver disconnected or jammed closed. Check wiring or replace control unit.
RF open DMP or shorted driver	RF wheel DMP valve driver short circuit or jammed open. Check wiring or replace control unit.
RF shorted ISO or open driver	RF wheel DMP valve driver disconnected or jammed closed. Check wiring or replace control unit.
RF open ISO or shorted driver	RF wheel ISO valve driver short circuit or jammed open. Check wiring or replace control unit.
LR shorted DMP or open driver	RF wheel ISO valve driver disconnected or jammed closed. Check wiring or replace control unit.
LR open DMP or shorted driver	LR wheel DMP valve driver short circuit or jammed open. Check wiring or replace control unit.
LR shorted ISO or open driver	LR wheel DMP valve driver disconnected or jammed closed. Check wiring or replace control unit.
LR open ISO or shorted driver	LR wheel ISO valve driver short circuit or jammed open. Check wiring or replace control unit.
RR shorted DMP or open driver	LR wheel ISO valve driver disconnected or jammed closed. Check wiring or replace control unit.

Faults	Solutions
RR open DMP or shorted driver	RR wheel DMP valve driver short circuit or jammed open. Check wiring or replace control unit.
RR shorted ISO or open driver	RR wheel DMP valve driver disconnected or jammed closed. Check wiring or replace control unit.
RR open ISO or shorted driver	RR wheel ISO valve driver short circuit or jammed open. Check wiring or replace control unit.
open pump motor	Electro-hydraulic unit pump circuit open. Replace control unit
bad motor driver	Electro-hydraulic unit pump malfunction. Replace control unit
shorted pump motor	Electro-hydraulic unit pump motor short. Replace control unit
shorted relay	ECU internal relay always closed. Replace control unit
open relay	ECU internal relay always open. Replace control unit
bad ralay driver	ECU internal relay malfunction. Replace control unit
stuck or inoperative brake switch	Brake / ABS switch malfunction. Inspect and replace if necessary
yellow warning lamp shorted to battery	ABS warning light shorted to +12V
yellow warning lamp shorted to ground	ABS warning light earth fault
wheel speed error	Speed difference on one or more wheels ± 20%
mismatched wheel speeds	Wheel speeds are incompatible
wheel speed difference 8/16 bit CPU	Electronic unit CPU fault

Faults	Solutions
vehicle inhibit code	ABS control unit code is invalid
excessive ISO time out	Cont. ISO valve activation time exceeded - possible damage
CPU loop time error	CPU internal clock error
excessive DMP time out	Cont. DMP valve activation time exceeded - possible damage
inoperative external watch-dog	Relay control circuit malfunction
RAM/ROM error 8 bit	ROM/RAM fault
ROM error 16 bit	ROM/RAM fault
RAM error 16 bit	ROM/RAM fault
valve coil circuit - battery voltage > 16V	Valve actuator voltage > 16V
valve coil circuit - battery voltage < 9V	Valve actuator voltage < 9V
valve coil circuit - battery voltage < 9.5V	Valve actuator voltage < 9.5V