Index

27 - FRONT DIFFERENTIAL

CONTENTS

DESCRIPTION P. 3

SPECIFICATIONS AND DATA P. 4
Tightening torque table

RULES AND OPERATIVE PRECAUTIONS P. 5

REMOVAL AND REFITTING P. 6
Removal
Refitting

DISASSEMBLY P. 7
Differential
Pinion

OVERHAULING P. 11
Hubs
Differential
Pinion

ASSEMBLY P. 19
Crown bearing pre-load determination
Pinion bearing pre-load determination
Pinion position determination
Pinion assembly completion
Pinion-crown clearance adjustment
Final assembly

CHECKS AND INSPECTIONS P. 34
Oil change 33
Vehicle-fitted propeller shaft seal replacement 34

DESCRIPTION

The front differential is driven through the propeller shaft by the viscous coupling, that ensures the distribution of the torque between the forecarriage and the rear axle. The differential is the partially self-locking type.

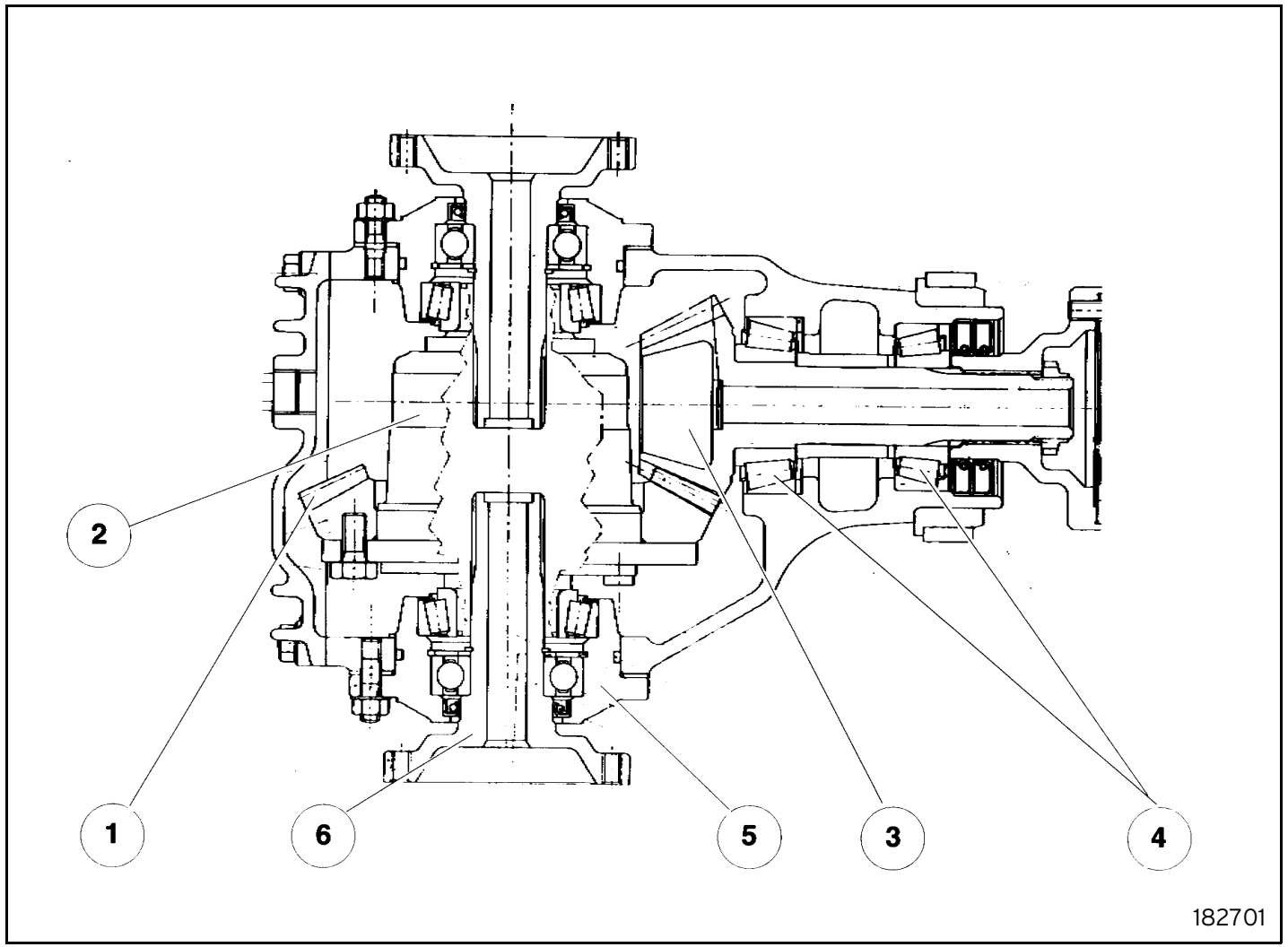

1 Crown
2 Differential
3 Pinion
4 Roller bearing
5 Differential flange
6 Axle shaft flange

Fig. 1 - Differential section

SPECIFICATIONS AND DATA

Reduction crown wheel and pinion	Hypoid
Reduction ratio	1:2.8125
Self-locking percentage	25%
Type of bearing	Taper roller
Pre-load adjustment	With spacer washers
Pinion bearings pre-load: rolling torque	11 ± 1 daNm
Crown bearings pre-load: rolling torque	21 ± 1 daNm
Pinion-crown coupling clearance (mm)	0.09 ± 0.12

Tightening torque table

Part	Tightening torque [Nm]	Page reference
Axle shaft flange screws	39.0	6
Steering box screws	45.0	6
Propeller shaft flange screws	39.0	6 - 34
Crown wheel screws	70.0	16
Hub nuts	30.0	20 - 32
Flange ring	150.0	23 - 28
Box cover screws	30.0	32

RULES AND OPERATIVE PRECAUTIONS

WARNING

- All operations must be carried out with the utmost care to avoid injury to persons.
- Specific tools are required for certain procedures. The use of these tools is essential to ensure safe operation.
- Follow the safety rules in force in the workshop. Specific warnings are provided in the manual where precautions are required to prevent hazardous situations.
- Scrupulously follow the instructions shown on the manufacturer's safety data sheet that the supplier is required to hand over to the user when employing chemical products.

CAUTION

- All operations must be carried out with the utmost care to avoid damage to components.
- Use a thickness gauge with a minimum precision of 1/100 mm for measuring.
- Loosen ferrous parts that are stuck together by knocking lightly with an aluminium or lead mallet. Use a resin or wood mallet for light alloy parts.
- During disassembly, check that reference marks are on the required parts.
- When refitting, lubricate the required parts to prevent seizing during initial operation.
- When refitting, It is essential to respect tightening torques and setting data.
- Replace seals, washers, snap rings, safety plates, lock nuts, caulked edge nuts and all other deteriorated parts when refitting.
- Use Loctite/Arexons 518 or Loctite/Arexons 641 as instructed when refitting.
- Use Loctite/Arexons medium thread adhesive 52A42 or Loctite/Arexons strong 52A70 when refitting.

NOTE

This symbol indicates important information.

REMOVAL AND REFITTING

Removal

Proceed as follows:

- Take the vehicle to a shop jack.
- Remove the upholstery panel from the front boot.
- Loosen the three fastening screws and move the ABS electric-hydraulic control unit away.
- Loosen the fastening screws and move the windscreen wiper flick control unit away.
- Loosen the two upper screws fastening the differential frame to the chassis.
- Remove the two u-bolts fastening the rack assembly and move the assembly forwards to allow differential assembly removal.
- From underneath the vehicle, disconnect the axle shafts and the propeller shaft from the differential flanges.
- Loosen the screws fastening the differential mount ring.
- From inside the front boot, loosen the screws fastening the frame to the differential carrier.
- Turn the differential assembly by approximately 90° to take the drive output flanges to vertical position and remove the assembly downwards.

Refitting

Refit by reversing the removal sequence. Specifically:

- Fit the axle shaft on both sides to the drive output flange and fasten the screws at the specified tightening torque:

  axle shaft flange screws: 39.0 Nm
- Fit the propeller shaft to the drive input flange and fasten the screws at the specified tightening torque:

  propeller shaft flange screws: 39.0 Nm
- Fit the steering box to the mount and fasten the screws at the specified tightening torque:

  steering box screws: 45 Nm

DISASSEMBLY

Use suitable tools for handling the assembly. Make sure that the assembly is correctly fastened and stabile to prevent it from tipping over or falling.

Fasten the assembly to a vice using the attachments on the top of the box. For this reason, the following illustrations show the assembly upside-down with respect to the normal working position.

Differential

Proceed as follows:

- Loosen the fastening screws and remove the differential carrier cover (figure 2).
- Loosen the fastening nuts and remove the hub with the respective adjustment shims A (figure 3). Repeat the operation on the opposite side (adjustment shims B).

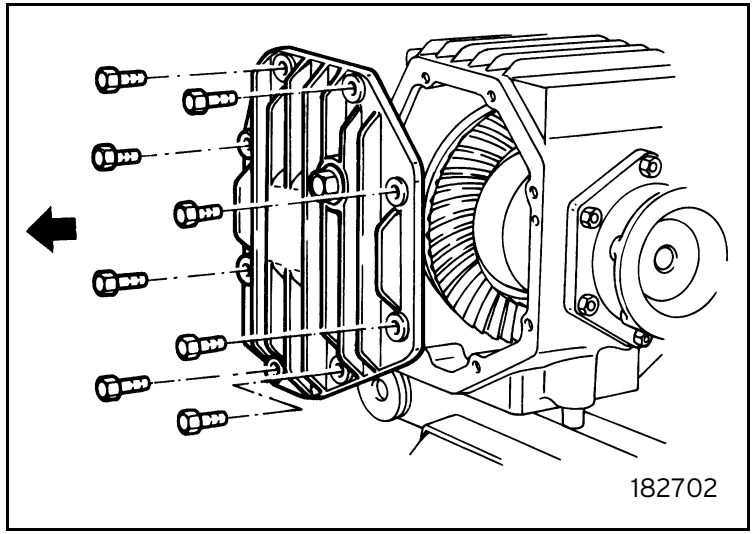

Fig. 2

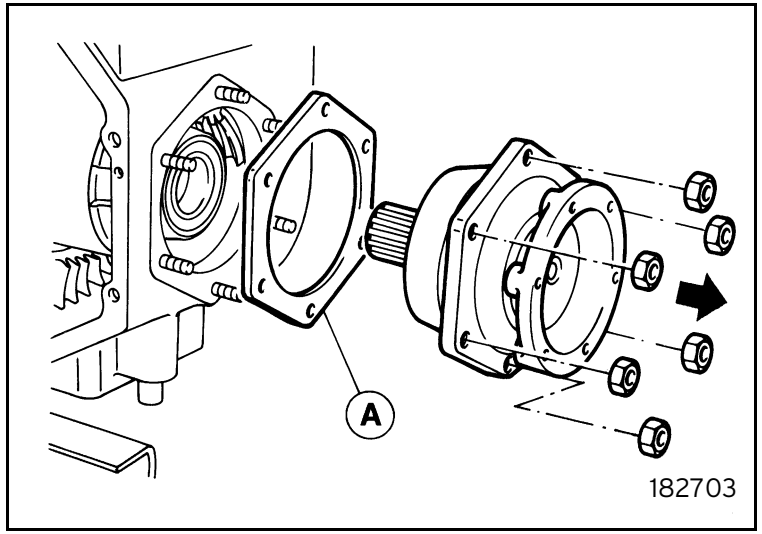

Fig. 3

- Remove the crown-planet gear set (figure 4).

Pinion
Proceed as follows:
- Straighten the nut caulking. Then remove the fastening ring and the propeller shaft flange (figure 5).

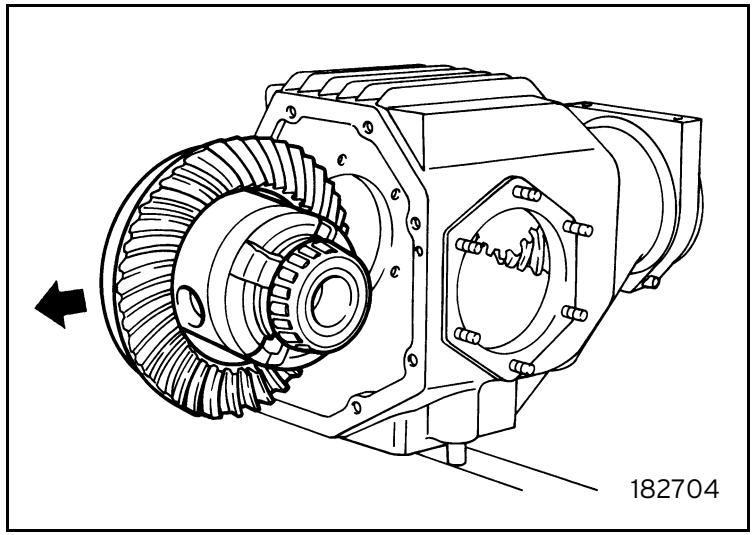

Fig. 4

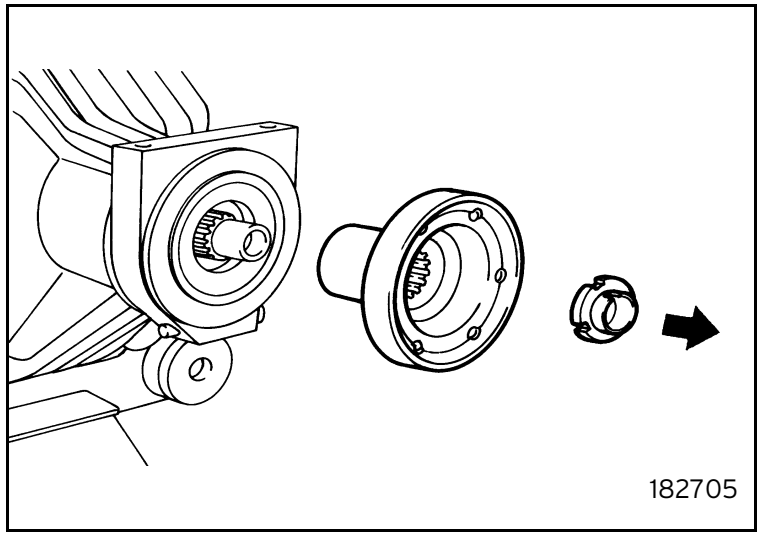

Fig. 5

- Remove the two seals (figure 6).
- Remove the outer bearing (figure 7).

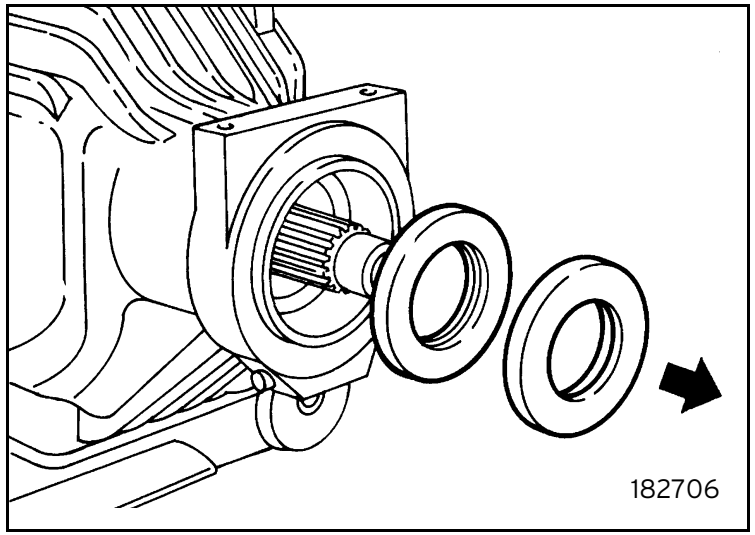

Fig. 6

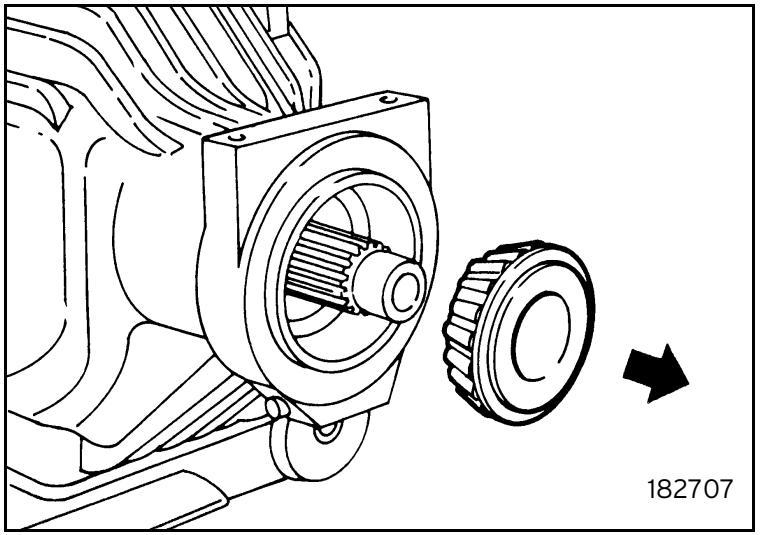

Fig. 7

- Remove the pinion with inner bearing, shims and adjustment shims C (figure 8).
- Use a punch to remove both roller bearing outer races and adjustment shims D (figure 9).

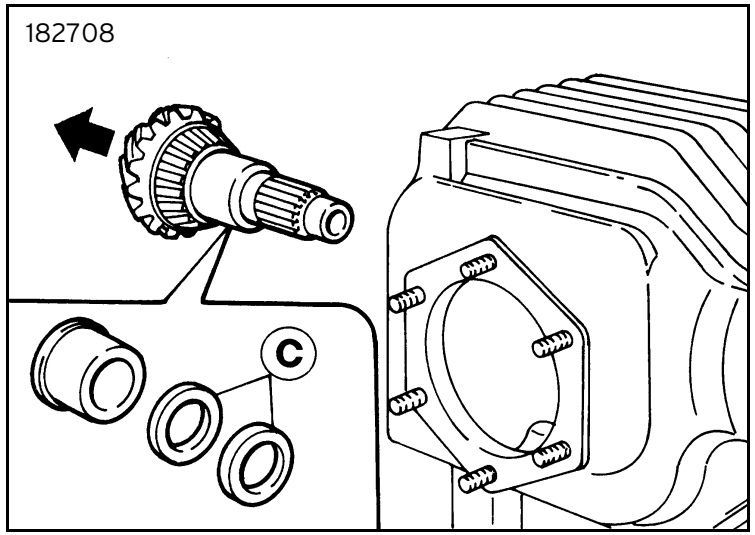

Fig. 8

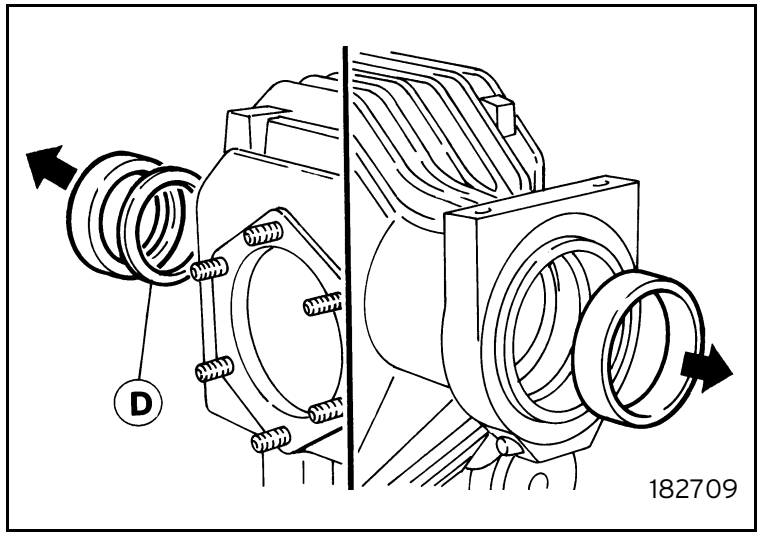

Fig. 9

OVERHAULING

Hubs

- Remove the snap ring, the shim and the axle shaft flange (figure 10). Repeat the operation on the other hub.
- Remove the seal (figure 11). Repeat the operation on the other hub.

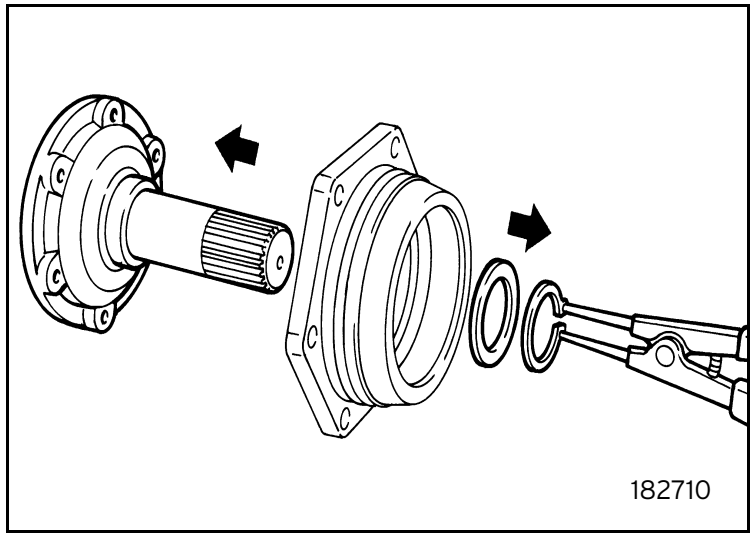

Fig. 10

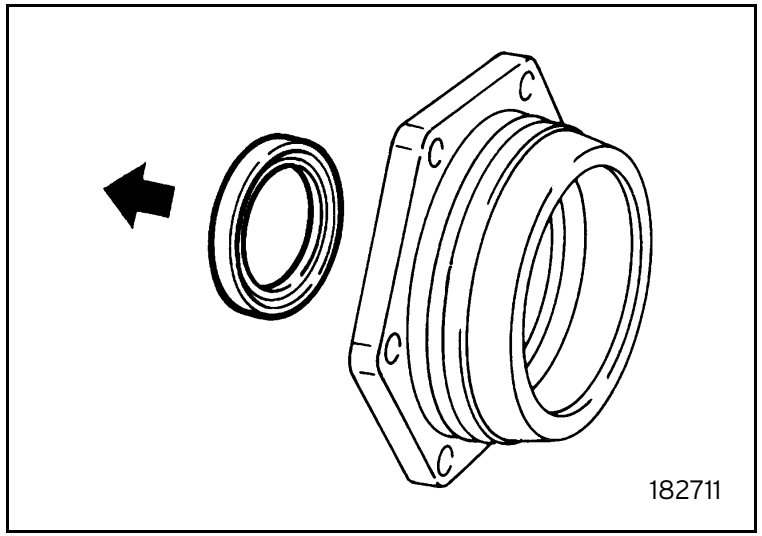

Fig. 11

- Remove the ball bearing snap ring (figure 12). Repeat the operation on the other hub.
- Use a block on the ball bearing. Remove the roller bearing outer race and the ball bearing. Remove the O-ring (figure 13). Repeat the operation on the other hub.

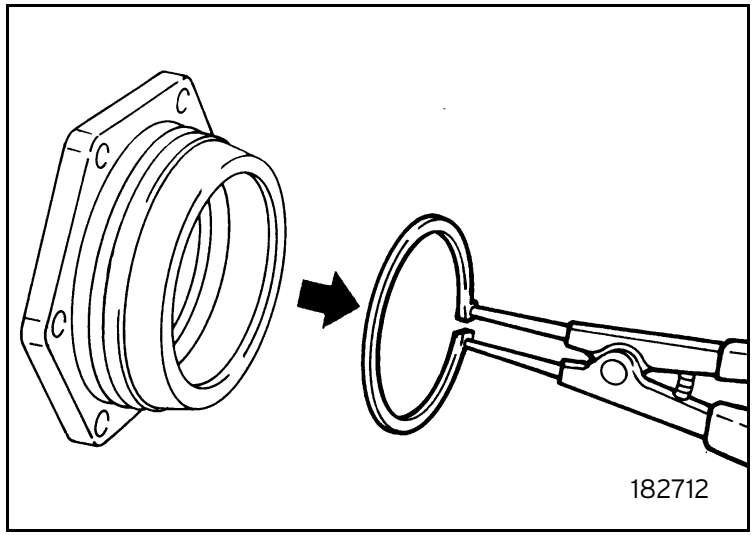

Fig. 12

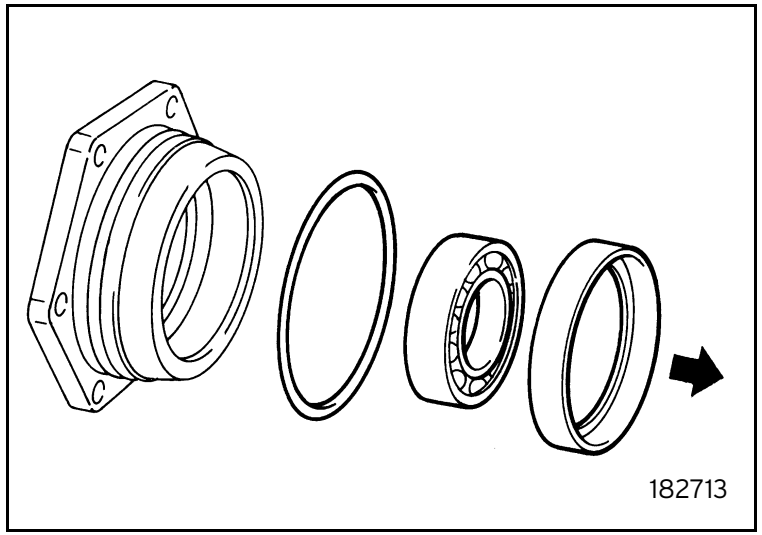

Fig. 13

- Accurately clean all the components.
- Check that the bearings are in good condition, without traces of overheating. Check that the races, the turning parts or the cages are not damaged.
- Check that the threading and the grooved profiles are not dented or grooved.
- Fit the O-ring and the ball bearing. Then fit the roller bearing outer race on the hub (figure 14). Repeat the operation on the other hub.
- Fit the ball bearing snap ring (figure 15). Repeat the operation on the other hub.

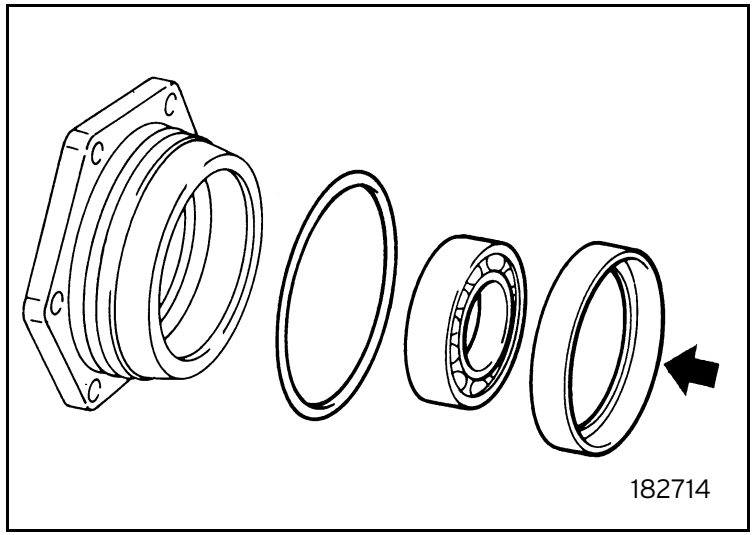

Fig. 14

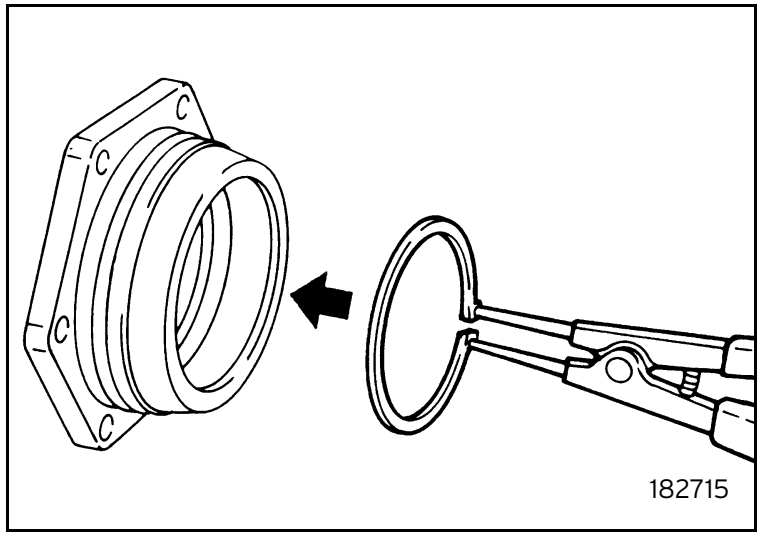

Fig. 15

- Use a block to fit the seal (figure 16). Repeat the operation on the other hub.

Direct the seal correctly, i.e. A inside and B outside.

- Fit the shim and the axle shaft flange. Fasten by means of the snap ring (figure 17). Repeat the operation on the other hub.

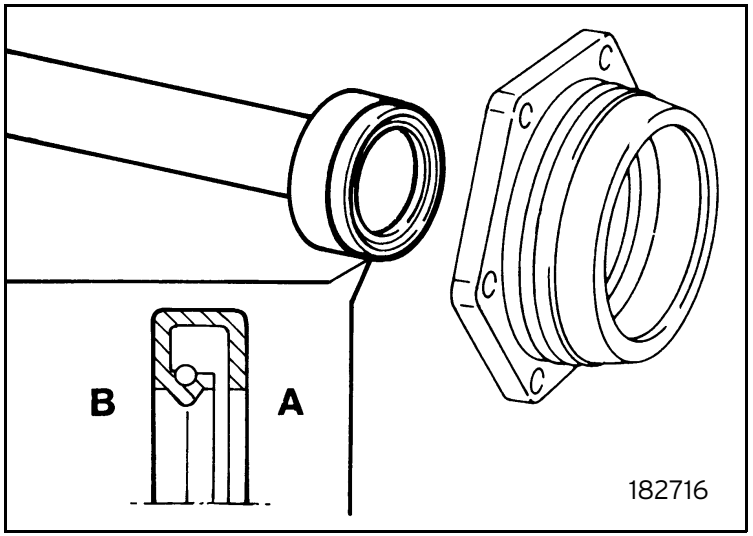

Fig. 16

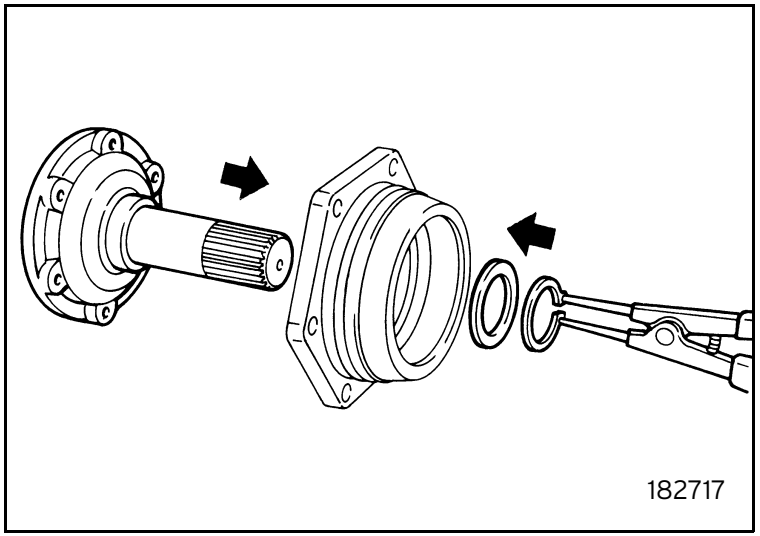

Fig. 17

Differential

- Use a suitable puller and place a shim in between to remove the roller bearing (figure 18). Repeat the operation on the other side.
- Loosen the fastening screws and remove the crown from the planet gear set (figure 19).

The planet gear set cannot be disassembled.
Replace the entire box in the event of a failure.

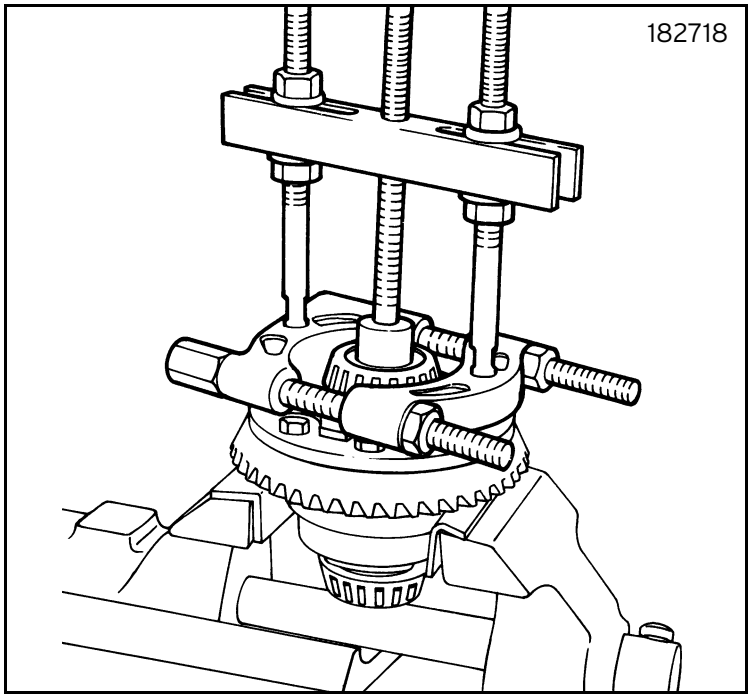

Fig. 18

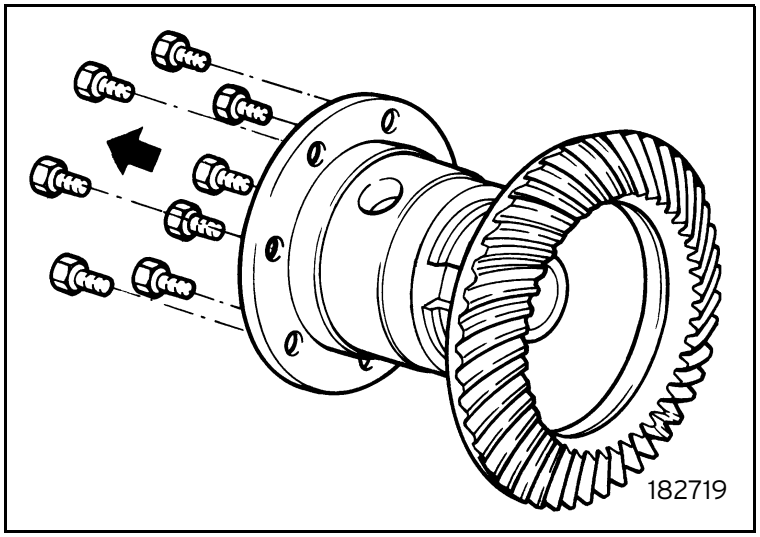

Fig. 19

- Accurately clean all components.
- Check that the crown tooth profile surfaces are not cracked or scratched.
- Check that the bearings are in good condition, without traces of overheating. Check that the races, the turning parts or the cages are not damaged.
- Check that the threading and the grooved profiles are not dented or grooved.

Always replace the respective crown or pinion after replacing the pinion or crown.

- Fit the crown on the planet gear seat and apply strong thread adhesive 52A70. Fasten the screws in a criss-cross fashion at the specified tightening torque (figure 20):

crown screws: 70.0 Nm

- Use a suitable block to fit the roller bearing (figure 21). Repeat the operation on the other side.

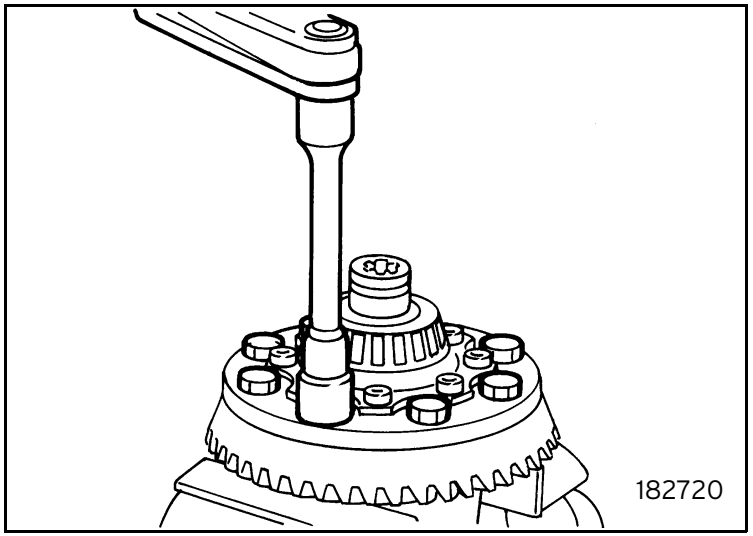

Fig. 20

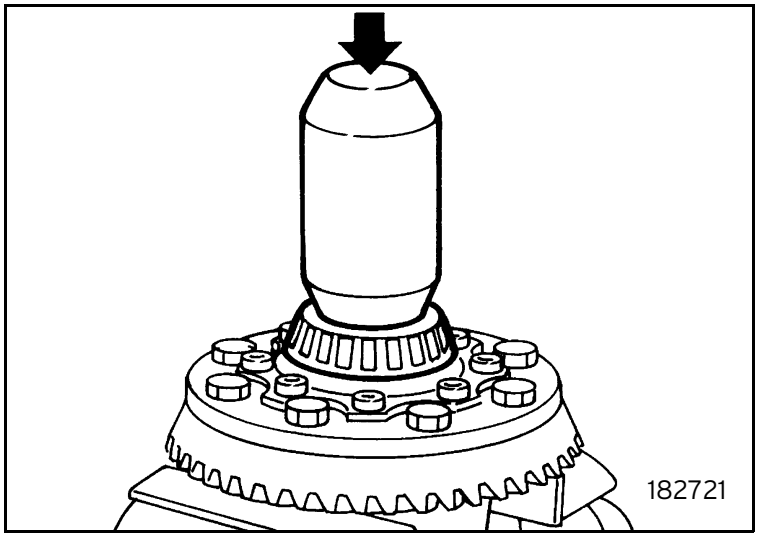

Fig. 21

Pinion

- Use a suitable puller to remove the inner pinion bearing (figure 22).
- Accurately clean all components.
- Check that the pinion tooth profile surfaces are not cracked or scratched.
- Check that the pinion bearings are in good condition, without traces of overheating. Check that the races, the turning parts or the cages are not damaged.
- Use a suitable block to fit the inner bearing pinion (figure 23).

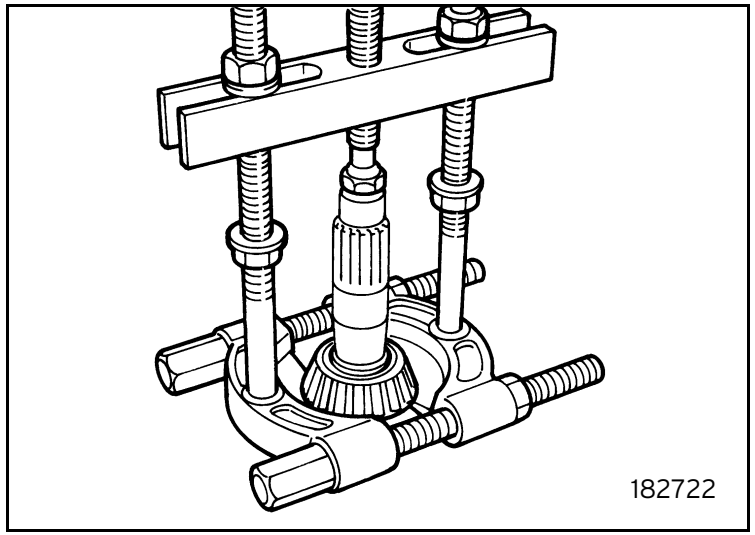

Fig. 22

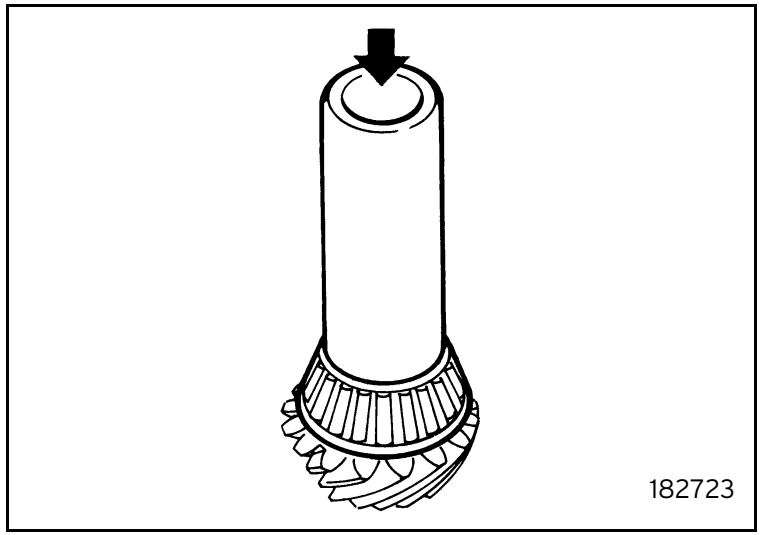

Fig. 23

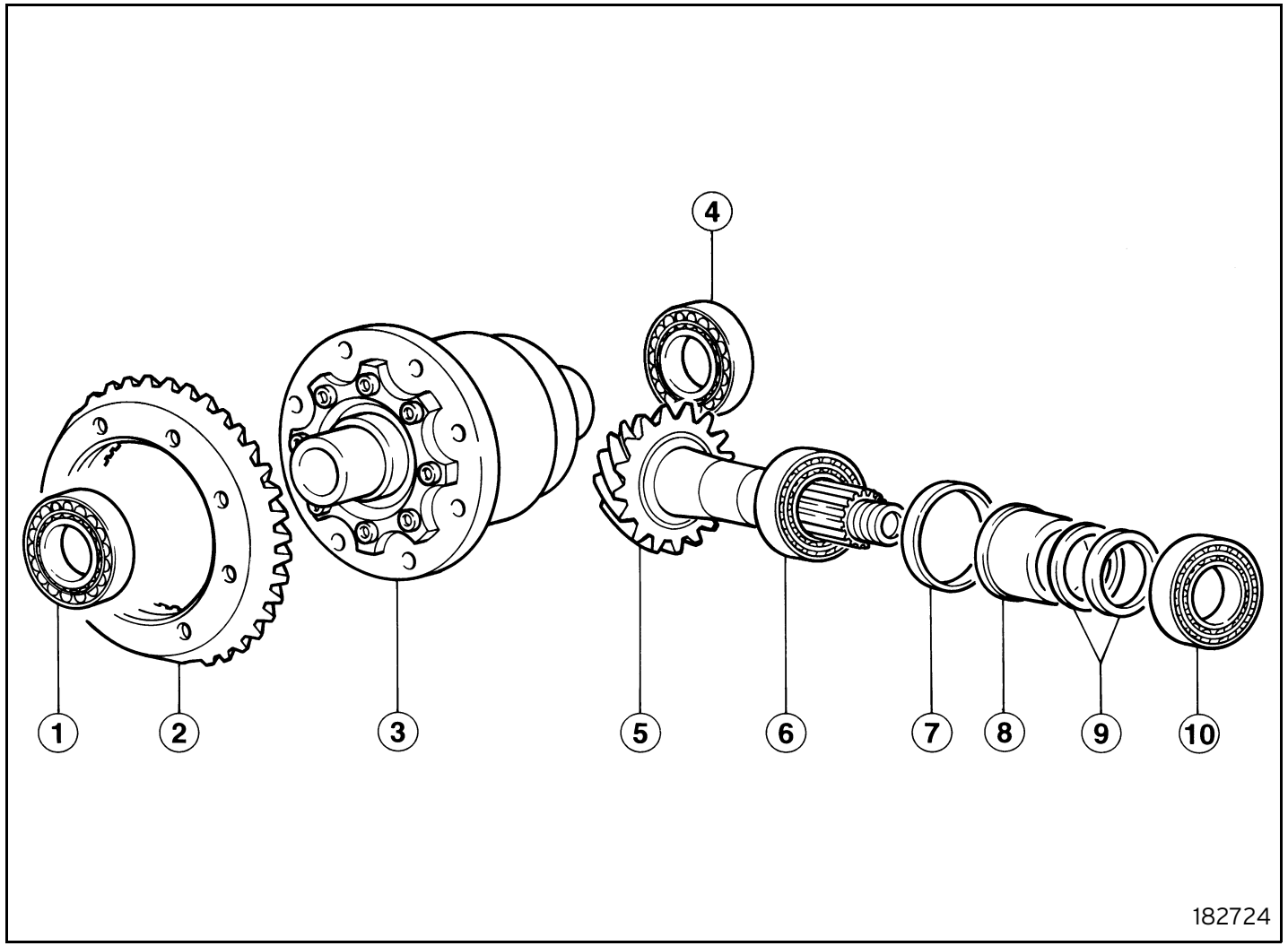

Fig. 24

1 Roller bearing crown side
2 Crown
3 Complete planet gear set
4 Roller bearing planet gear set side
5 Pinion
6 Inner roller bearing
7 Pinion position adjustment ring
8 Shim
9 Bearing/pinion position pre-load adjustment rings
10 Outer roller bearing

ASSEMBLY

Crown bearing pre-load determination

Proceed as follows:

- Fit the specified tentative adjustment shims A and B (figure 25):

tentative adjustment shim A: s A = 1.0 mm
tentative adjustment shim B: s B = 2.0 mm

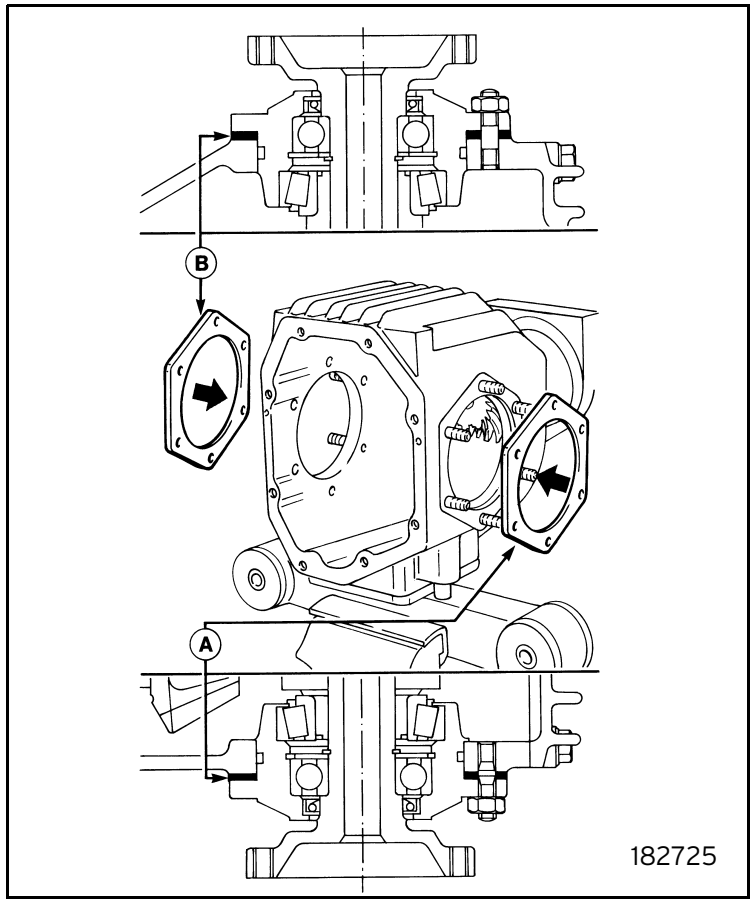

Fig. 25

- Arrange the differential assembly and fit the hub on both sides so that the two milled sections are in vertical position (see detail) and fasten the nuts at the specified torque (figure 26):

  hub nuts: 30.0 Nm

- Check the correct bearing pre-load as follows:
  - Fit a suitable tool for measuring the rolling torque on an axle shaft flange (figure 27).

⚠ The planet gear set does not need to be fastened thanks to the intrinsic characteristics of this differential.

  - Check that the rolling torque (ignoring the pickup) is within the specified values:

    specified torque: 21.0 ± 1.0 Nm

  - If this is not so, operate on adjustment shim A (detail) as follows:
    - to **increase** torque -> **decrease** thickness
    - to **decrease** torque -> **increase** thickness
  - Remove the hubs and the differential assembly at the end of these operations.

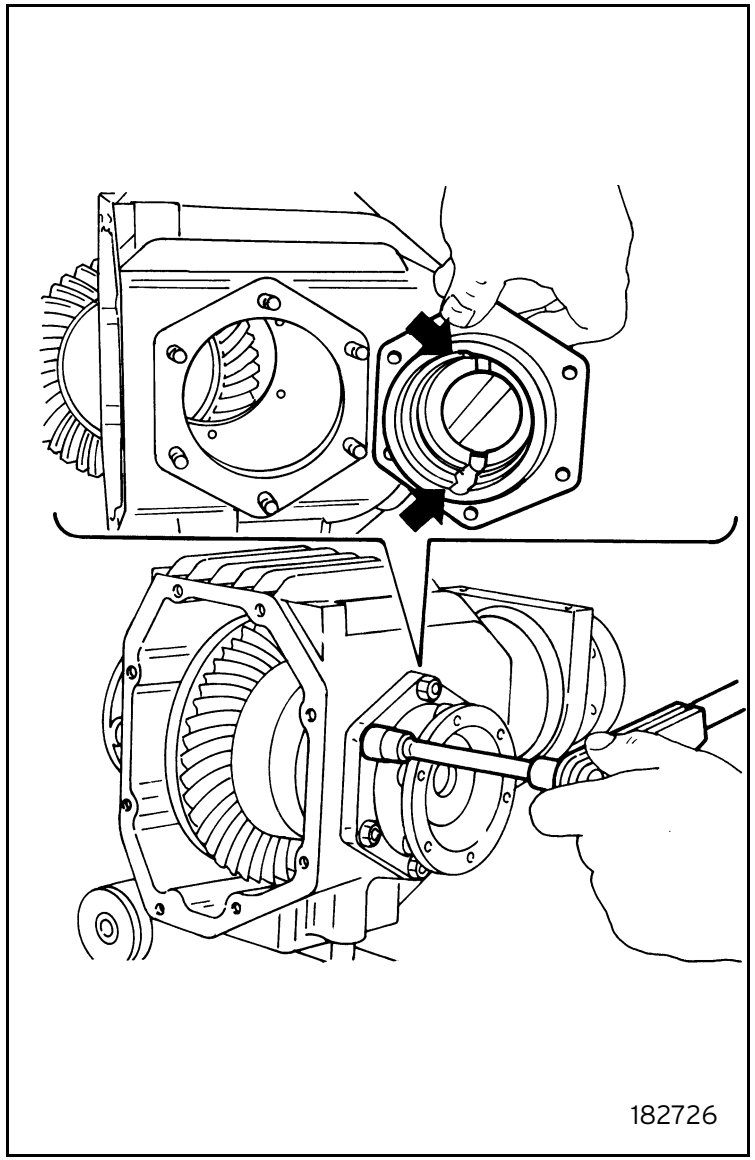

Fig. 26

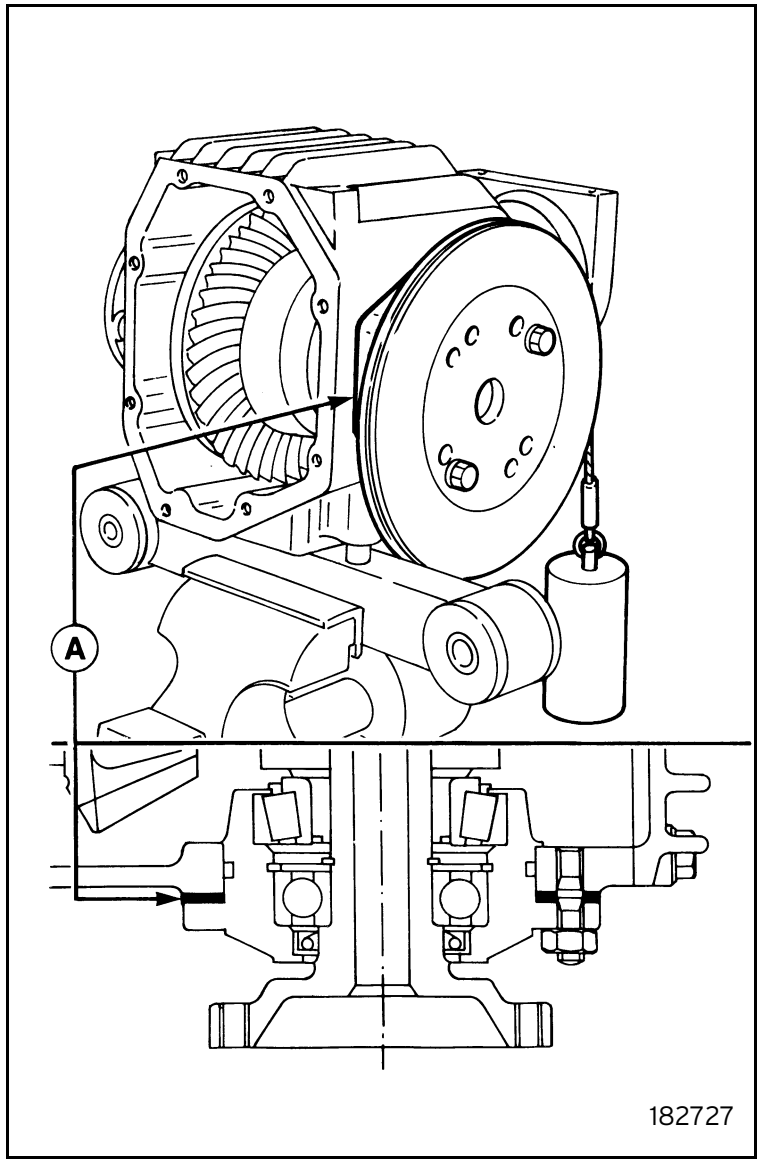

Fig. 27

Pinion bearing pre-load determination

Proceed as follows:

- Fit the specified tentative adjustment shim D using a suitable block. Then fit both pinion outer bearing races (figure 28):

  tentative adjustment shim D: s D = 2.4 mm
- Fit the pinion and differential and the tentative shims C (figure 28):

  tentative adjustment shims C: s C = 3.1 mm (total)
- Fit the outer bearing race (figure 29).

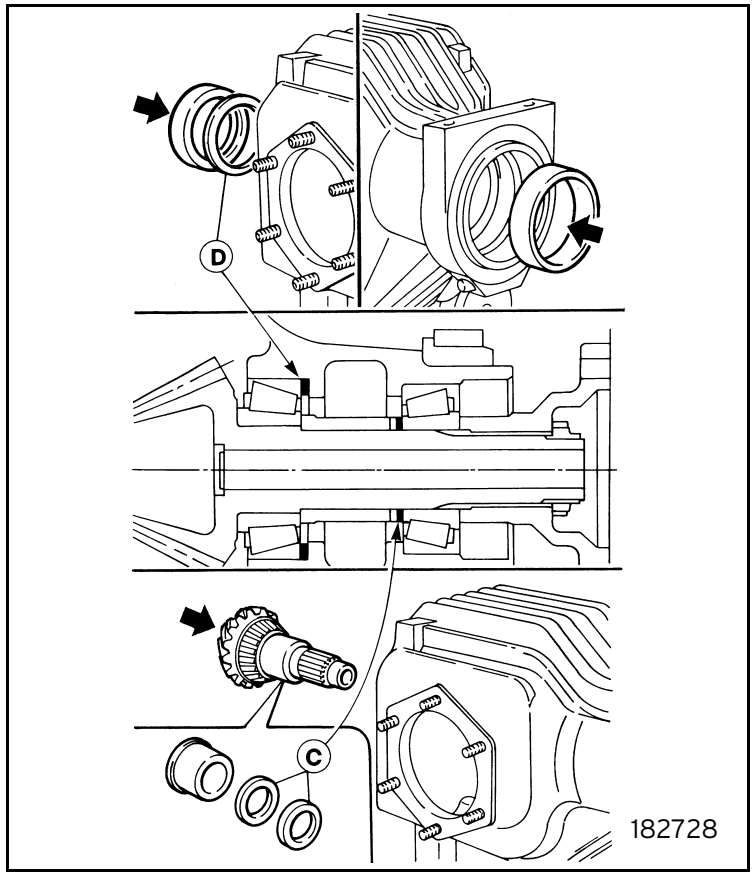

Fig. 28

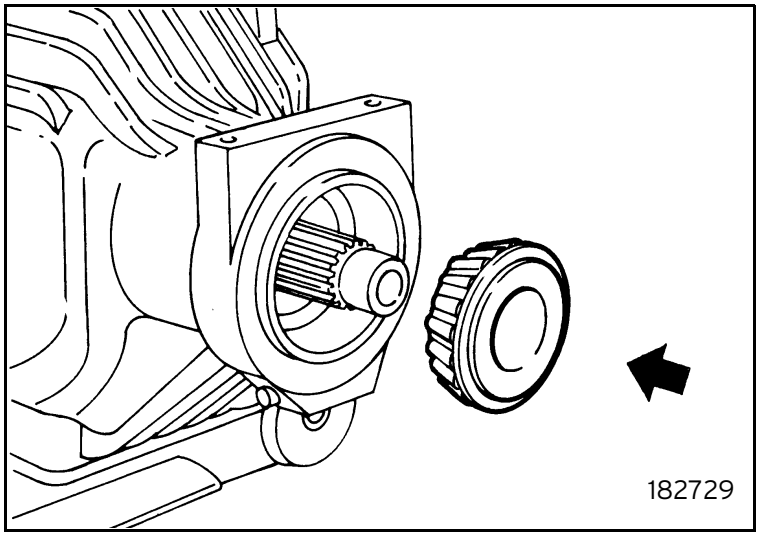

Fig. 29

- Fit the propeller shaft flange, apply Molycote 1000 and fasten the ring at the specified tightening torque (figure 30):
  flange ring: 150 Nm

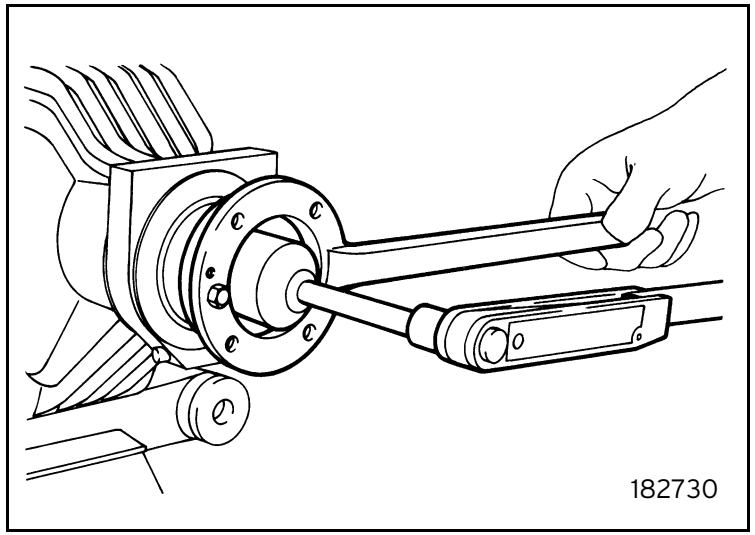

Fig. 30

- Check the correct bearing pre-load as follows:
- Fit a suitable tool for measuring the rolling torque on the flange (figure 31).
  - Check that the rolling torque (ignoring the pickup) is within the specified values:

    specified torque: 11 ± 1.0 Nm
  - If this is not so, operate on adjustment shims C (detail) as follows:
    - to **increase** torque -> **decrease** thickness
    - to **decrease** torque -> **increase** thickness.

A torque value tending towards the upper tolerance limit should be preferred.

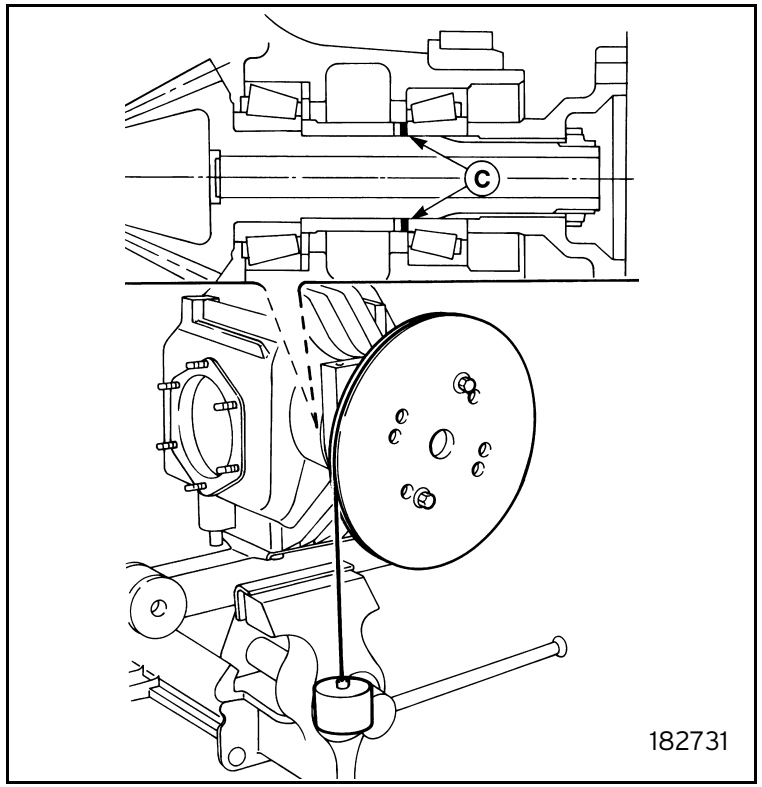

Fig. 31

Pinion position determination
Proceed as follows:
- Read the value printed on the pinion (arrow) indicating the offset of dimension X (figure 32).

A value with a positive sign indicates that during assembly the pinion plane is to be distanced from the crown by the shown amount, i.e. the value is to be subtracted from the dial gauge reading while adjusting.
A value with a negative sign indicates that during assembly the pinion plane is to be approached to the crown by the shown amount, i.e. the value is to be summed to the dial gauge reading while adjusting.

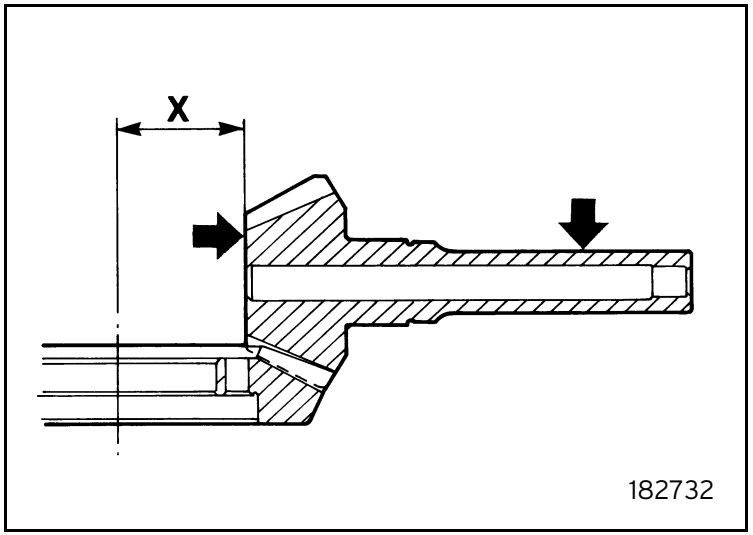

Fig. 32

- Check the correct value of dimension X as follows (figure 33):
  - Use a thickness gauge to check that the measurement is within the specified range:

dimension X: 53 ± printed value ± 0.03 mm

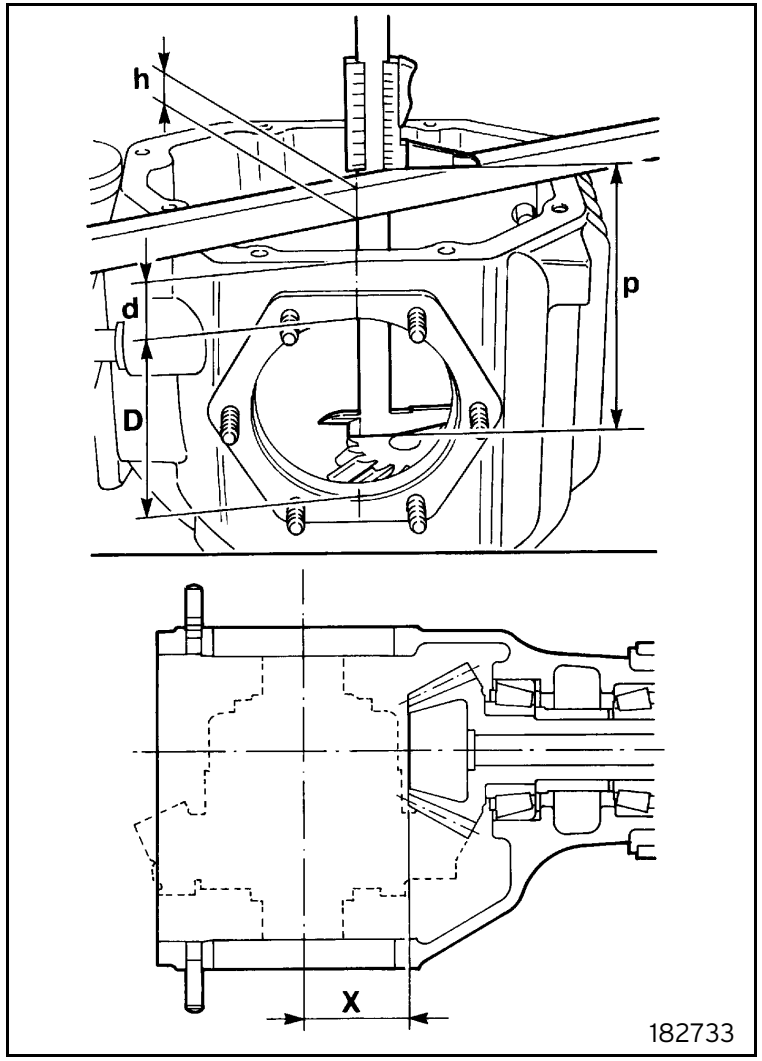

Fig. 33

Proceed as follows to make this measurement correctly (dimensions are expressed in mm):

- Measure the hub seat diameter D.
- Measure the distance d between the hub seat and the cover union plane.
- Measure height h of the reference plane.
- Measure p with a thickness gauge.
- Apply the following formula:

$$X = p - (h+d+D/2)$$

- If this is not so, operate on adjustment shims as follows:
  - to **increase** dimension X -> **reduce** both shims C and D by the same amount.
  - to **decrease** dimension X -> **increase** both shims C and D by the same amount.
- Check dimension X again.

Fasten the propeller shaft flange fastening ring at the specified tightening torque whenever dimension X is measured.

- Remove the propeller flange ring and the flange at the end of the operations.

Pinion assembly completion
Proceed as follows:
- Fit the inner seat with a suitable block (figure 34).

Direct the seal correctly, i.e. A inside and B outside.

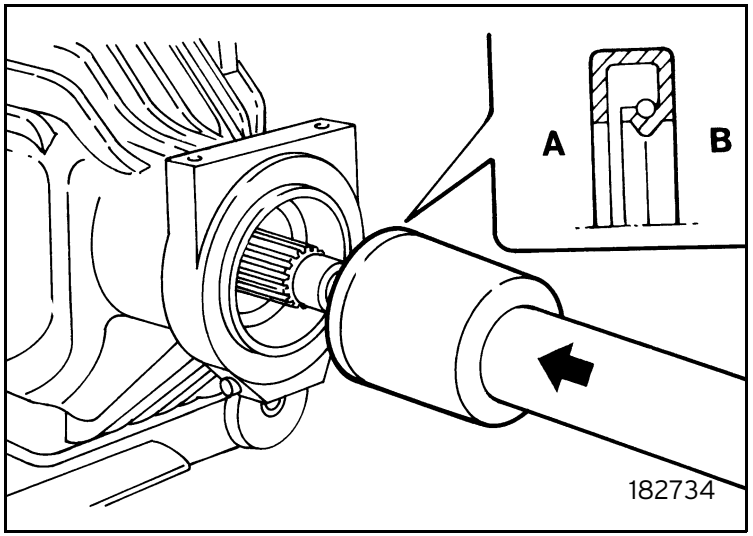

Fig. 34

- Make a hole (diameter 2 mm) on the outer seal body (detail), fill the space between the rings with grease and use a suitable block to fit the outer seal (figure 35).

Make the hole in the upper part.
Direct the seal correctly, i.e. A inside and B outside.

- Fit the propeller shaft flange and fasten the ring at the specified tightening torque (figure 36):

flange ring: 150 Nm

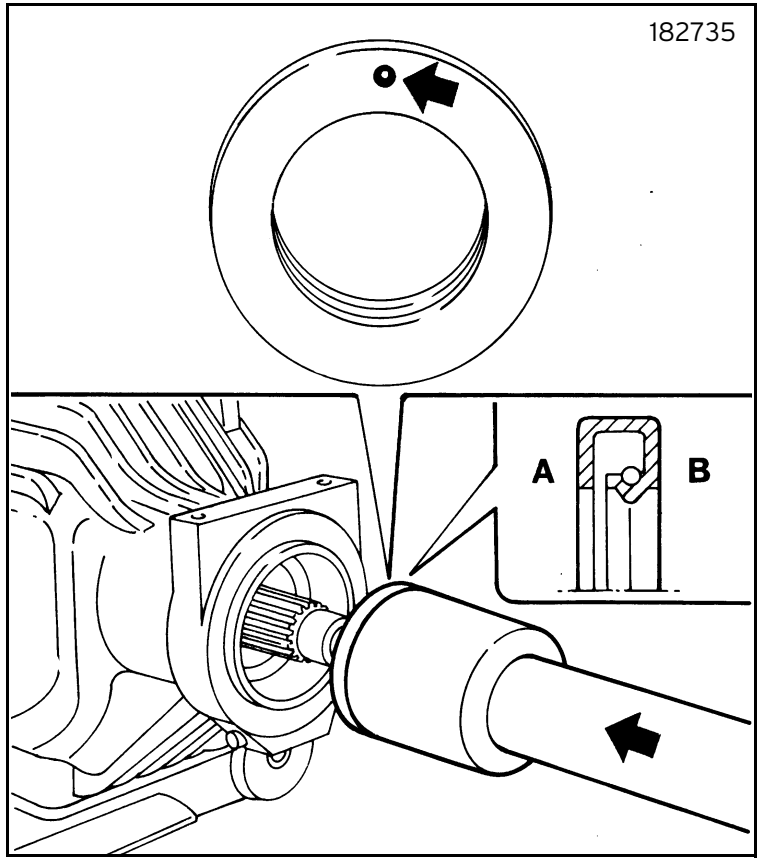

Fig. 35

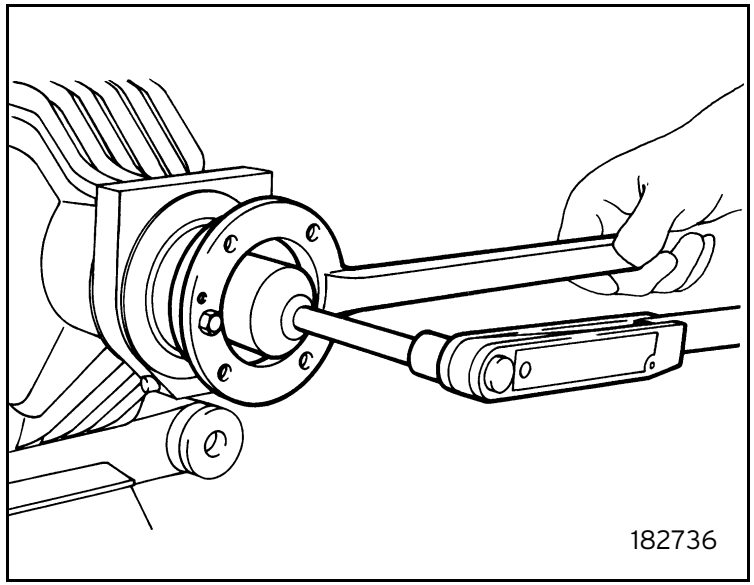

Fig. 36

Pinion-crown clearance adjustment

Assemble the hubs and the differential as shown in the paragraph "Crown bearing pre-load determination":

- Fit the previously identified adjustment shims A and B, arrange the differential assembly, fit the hub on both sides and fasten the nuts at the specified tightening torque.
- Check the correct pinion-crown clearance as follows:
  - Check that the measurement is within the specified values with a dial gauge (figure 37):

    pinion-crown clearance: 0.09 - 0.12 mm
  - If this is not so, work on the adjustment shims as follows (figure 38):
    - to **reduce** clearance -> **reduce** thickness B and increase thickness A by the same amount
    - to **increase** clearance -> **increase** thickness B and reduce thickness A by the same amount.
- Remove the hubs at the end of the operation.

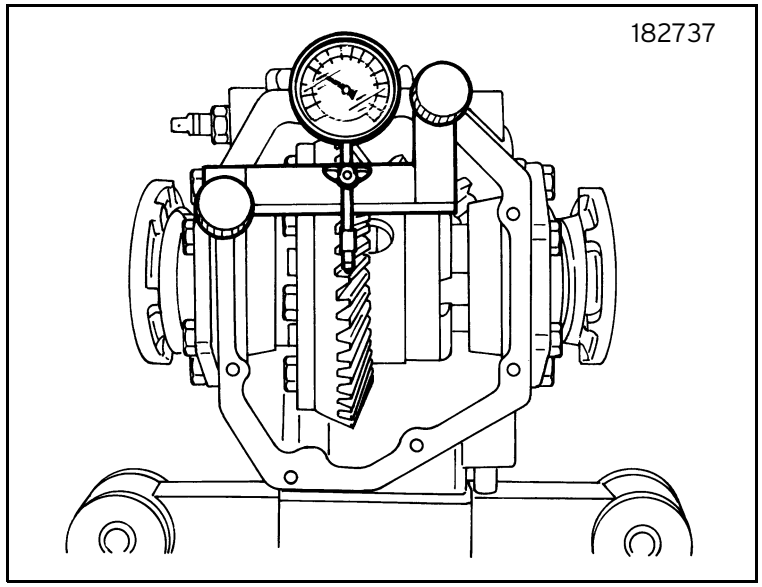

Fig. 37

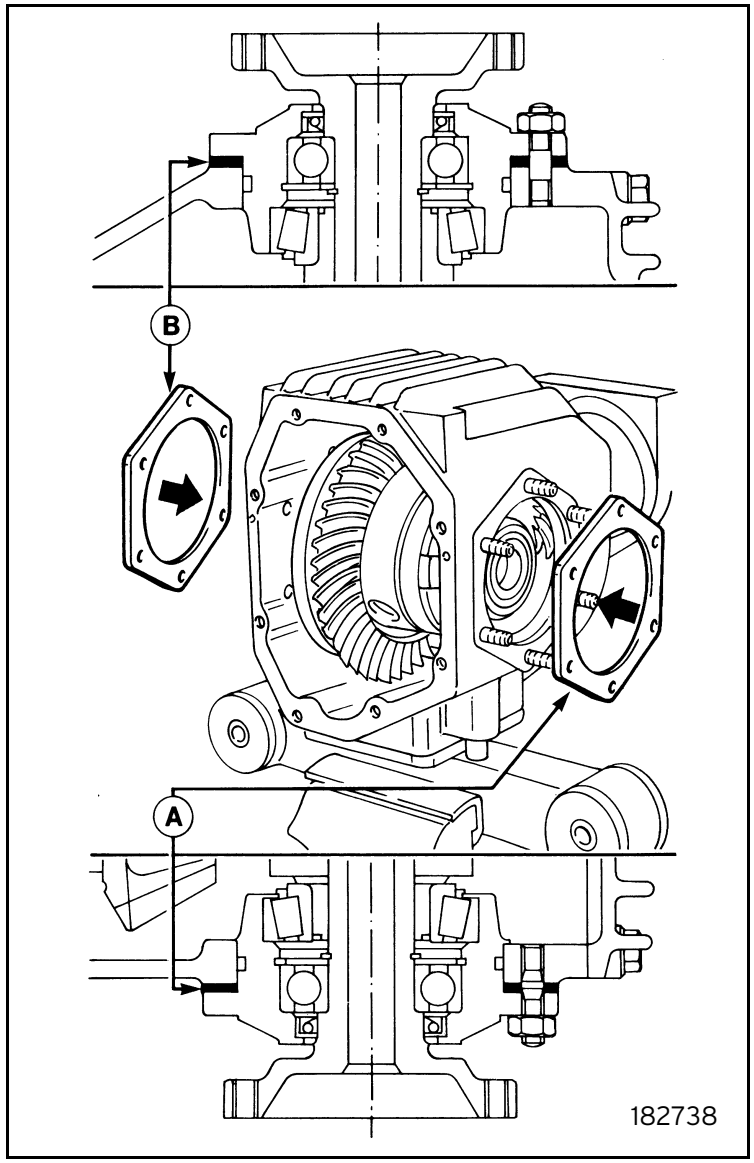

Fig. 38

Final assembly

Proceed as follows:

- Apply Loctite 518 sealant on the union surface between box and hubs. Fit the hubs fastening the nuts at the specified tightening torque (figure 39):

hub nuts: 30.0 Nm

The strip of sealant must be seamless. The sealant must get inside the screw and centring pin holes (detail).

- Apply Loctite 518 sealant on the union surface between box and box cover. Fit the cover fastening the screws at the specified tightening torque (figure 40):

box cover screws: 30.0 Nm

The strip of sealant must be seamless. The sealant must get inside the screw and centring pin holes (detail).

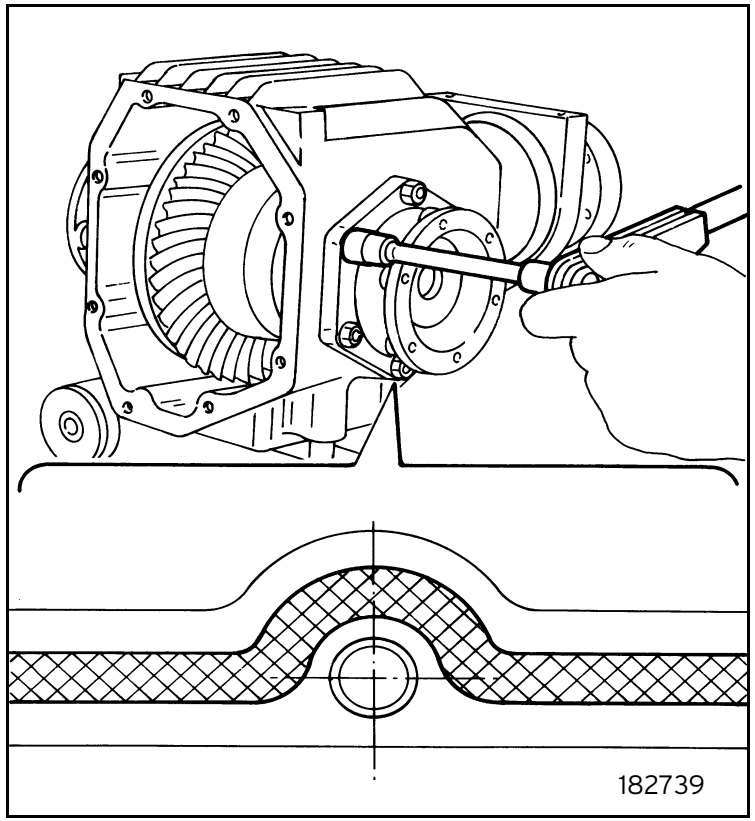

Fig. 39

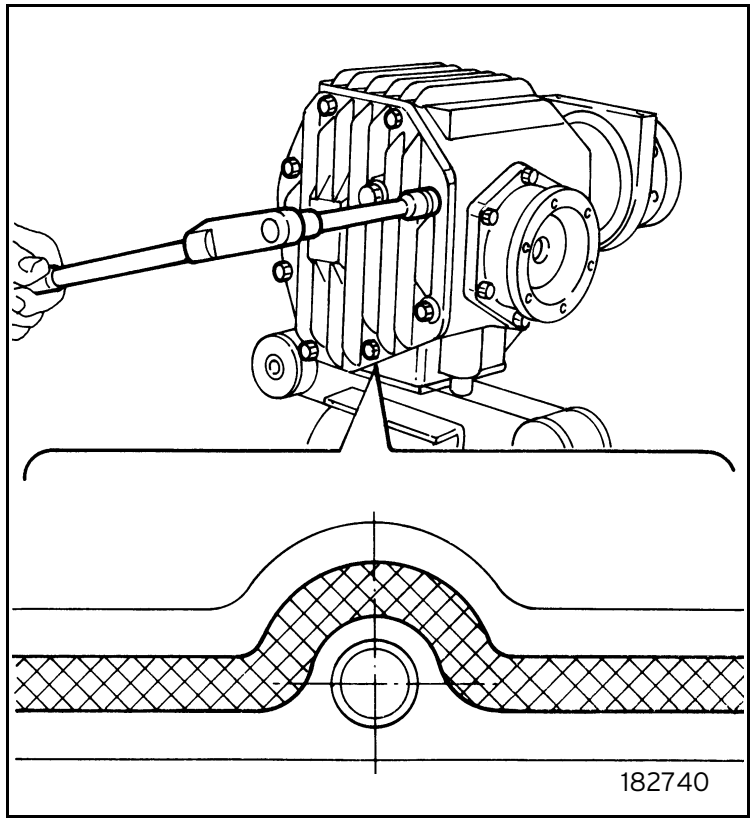

Fig. 40

CHECKS AND INSPECTIONS

Oil change

Proceed as follows (figure 41):

- Remove the drain cap A and let all the oil flow out from the differential.
- Clean the cap and fasten it back.
- Pour in oil of the specified type through filler B until the oil level reaches the lower edge of the hole.

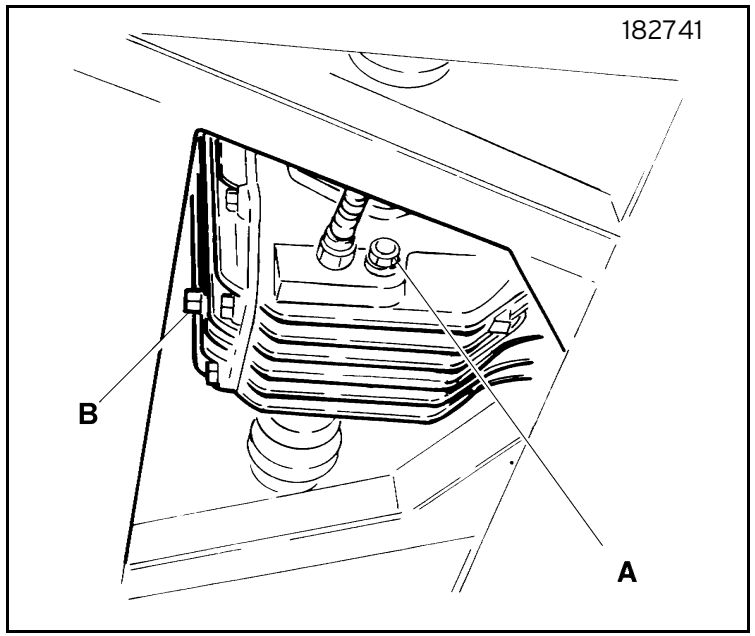

Fig. 41

Vehicle-fitted propeller shaft seal replacement

Proceed as follows:

- Disconnect the propeller shaft from the differential flange from underneath the vehicle.
- Straighten the ring caulking, then remove the fastening ring and the propeller shaft flange (see figure 5).
- Remove the two seals (see figure 6).
- Use a block to fit the inner seal (see figure 34).

Respect the correct direction of the seal.

- Make a hole (diameter 2 mm) on the outer seal body (detail), fill the space between the rings with grease and use a suitable block to fit the outer seal (figure 35).

Make the hole in the upper part.
Respect the correct direction of the seal.

- Fit the propeller shaft flange and fasten the ring at the specified tightening torque (figure 36):

flange ring: 150 Nm

- Fit the propeller shaft to the drive input flange and fasten the screws at the specified tightening torque:

propeller shaft flange screws: 38.0 Nm