# 15 - ENGINE CONTROL SYSTEM

## CONTENTS

DESCRIPTION P. 3

SYSTEM MANAGEMENT STRATEGIES P. 4
Operating principle
Signal frame management
EEC engine control system functional layout
USA engine control system functional layout
Injection system
Activated carbon filter washing
Ignition system
Engine idle speed control

ELECTRICAL/ELECTRONIC SYSTEM P. 17
Engine speed and TDC sensor
Engine timing sensor
Absolute pressure sensor
Lambda sensor
Ignition coil
Spark plugs
Engine coolant temperature sensor
Intake air temperature sensor
GFA control unit

FUEL SUPPLY SYSTEM P. 25
Fuel pump
Fuel filter
Fuel manifold
Fuel pressure regulator
Injectors

INTAKE SYSTEM P. 31
Throttle opening actuator
Throttle case
Throttle position sensor

EXHAUST SYSTEM P. 35
Catalytic converter
Exhaust gas temperature control device
Exhaust noise control system ENCS

ANTI-EVAPORATION DEVICES P. 40
Recycling system for gas coming from the crankcase (blow-by)
Fuel anti-evaporation system

CHECKS AND ADJUSTMENTS P. 44
General overview
Basic adjustment of idle speed
Idle speed adjustment
CO and HC contents check
Idle mixture strength (Arabia version)
Fuel circuit checks

SELF-DIAGNOSTICS SYSTEM P. 50
General overview
OBD II self diagnostics system

SYSTEM DIAGNOSTICS P. 53
Preliminary checks
OBDII scan tool
LDAS (Lamborghini Data Acquisition System)
OBDII strategy error codes

## DESCRIPTION

The LIE system is a system that integrates a digital electronic ignition spark advance and static timing system with an electronic indirect fuel injection system of the multiple timed sequential type.
According to the structure of the engine, which has the cylinders divided into two cylinder banks, two complete systems have been applied that are opportunely synchronised with each other, and each controls a cylinder bank of six cylinders. As a consequence there are two engine control units, connected to each other by the CAN line, managing the injection and ignition of each cylinder bank. These control units are also connected by the CAN line to the GFA control unit that co-ordinates and manages many functions, especially concerning diagnostics.
The system can be divided into the following sub-systems:

ELECTRICAL/ELECTRONIC SYSTEM
FUEL SUPPLY SYSTEM
INTAKE SYSTEM
EXHAUST SYSTEM
ANTI-EVAPORATION DEVICES

The system can acquire the following parameters:

- engine rpm;
- correct TDC sequence of the cylinders (injection timing);
- absolute pressure in the intake manifold;
- throttles position and position variation;
- intake air temperature;
- engine coolant temperature;
- exhaust gas internal temperature;
- mixture titration ;
- battery voltage;
- start-up of air conditioner;
- exhaust manifold pressure;
- fuel anti-evaporation circuit pressure.

This information if analogue, is converted to digital signals by the A/D converters so that it can be used by the control unit.

A software management program is installed in the control unit memory which contains several strategies, each of which manages a certain system control function.
Using the information (input) listed above, each strategy processes a series of parameters based on the data maps stored in special areas of the control unit, then controls the system actuators (output) (the devices that permit the engine to operate).

All the system components can operate on both cylinder banks. Furthermore all the connectors are marked with a coloured band:
cylinder bank 1-6 : white;
cylinder bank 7-12: yellow.
For further information on the LIE and GFA control unit layouts, the pin-outs and electrical connections, see the Electric Wiring Diagrams Manual.

## SYSTEM MANAGEMENT STRATEGIES

**Operating principle**
Any operating point of the engine is found by two parameters:
- rotation speed;
- engine load.

Having found these parameters through the relevant processing, it is possible to calculate and obtain the injection (quantity of fuel delivered and relevant timing in relation to bursting TDC), ignition (correct spark advance) and any other function for each engine operating point.
In the LIE system the rotation speed is measured directly through the relevant sensor, whereas the engine load is determined indirectly, through a "density" parameter (representing the engine load) according to the absolute pressure in the intake manifold and the temperature of the intake air.
When testing the engine – and afterwards the car – specific maps are prepared in which, for a certain number of speed-load parameter pairs, the time/injection timing values and ignition spark advance required for correct engine operation are stored.
These injection time values are further corrected according to the signal coming from the lambda sensor that, based on certain operation strategies, determines a continuous fluctuation of the mixture titration around a stoichiometric value.
The system is therefore defined as "speed-density-lambda" type since the injection time is fundamentally determined by these three parameters.

All operation situations that require special adaptation of the calculated time/injection timing values, spark advance and boosting pressure are managed by the engine control unit, correcting the calculated base values through suitable strategies according to the signals coming from the system sensors.

**Signal frame management**

⚠ The name "signal frame" implies the group of signals coming from the sensor on the crankshaft and the sensor on the camshaft which, since they each have a well-defined reciprocal position send to the control unit a synchronised sequence of signals that the control unit is able to acknowledge.

Upon ignition, the control unit acknowledges the injection and ignition timing, which are fundamental for the subsequent operation of all the strategies.
This acknowledgement takes place on the basis of the interpretation of the sequence of signals coming from the engine speed sensor (one which serves both systems), on the engine flywheel and from the engine timing sensor on the camshaft.
On the engine flywheel there is a phonic wheel with six equidistant teeth: the angle between two consecutive teeth is therefore 60°. The phonic wheel is locked so that the teeth reach the sensor with an advance of 10° in relation to the relevant bursting TDC (electric dead centre advanced by 10° in relation to the mechanical dead centre)
A cam is locked on the camshaft of the 7-12 cylinder bank that generates a signal for each of the two sensors. The two sensors are shifted by 30°, corresponding to the opening 60° of the two engine cylinder banks.
The signal is sinusoidal and has to be converted to a digital signal by the A/D converter inside the control unit.
The cylinder sequence obviously depends on the engine bursting order which is:
1 – 7 – 4 – 10 – 2 – 8 – 6 – 12 – 3 – 9 – 5 – 11.

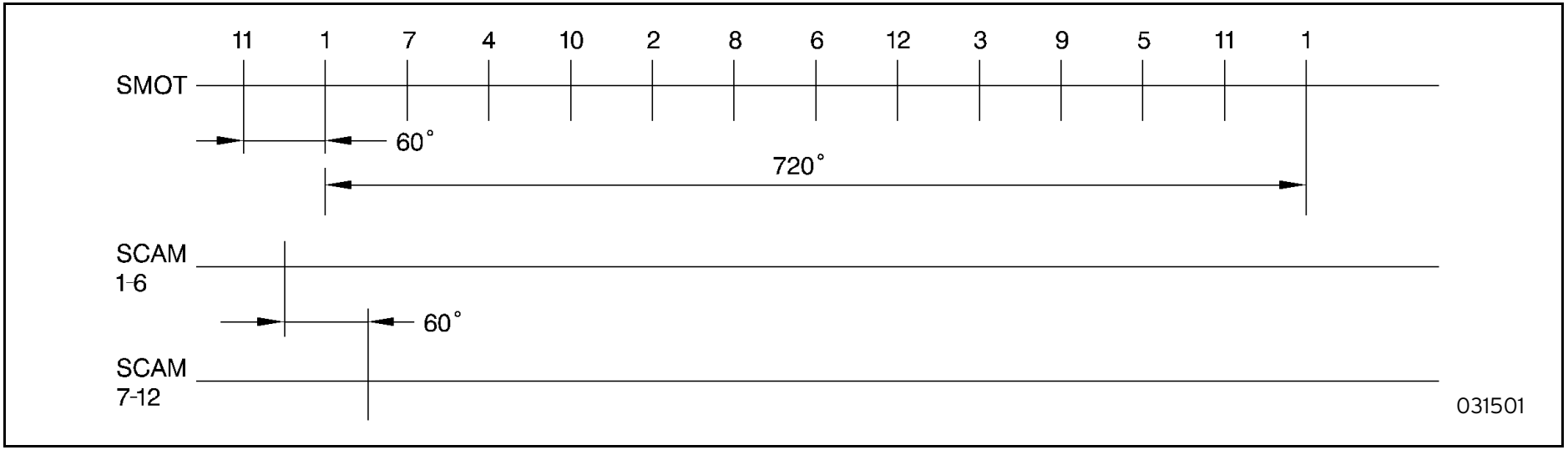


Fig. 1 - Signal panel (crankshaft degrees)

SMOT: engine speed and TDC sensor signal
SCAM 1-6: cylinder bank 1-6 timing sensor signal
SCAM 7-12: cylinder bank 7-12 timing sensor signal

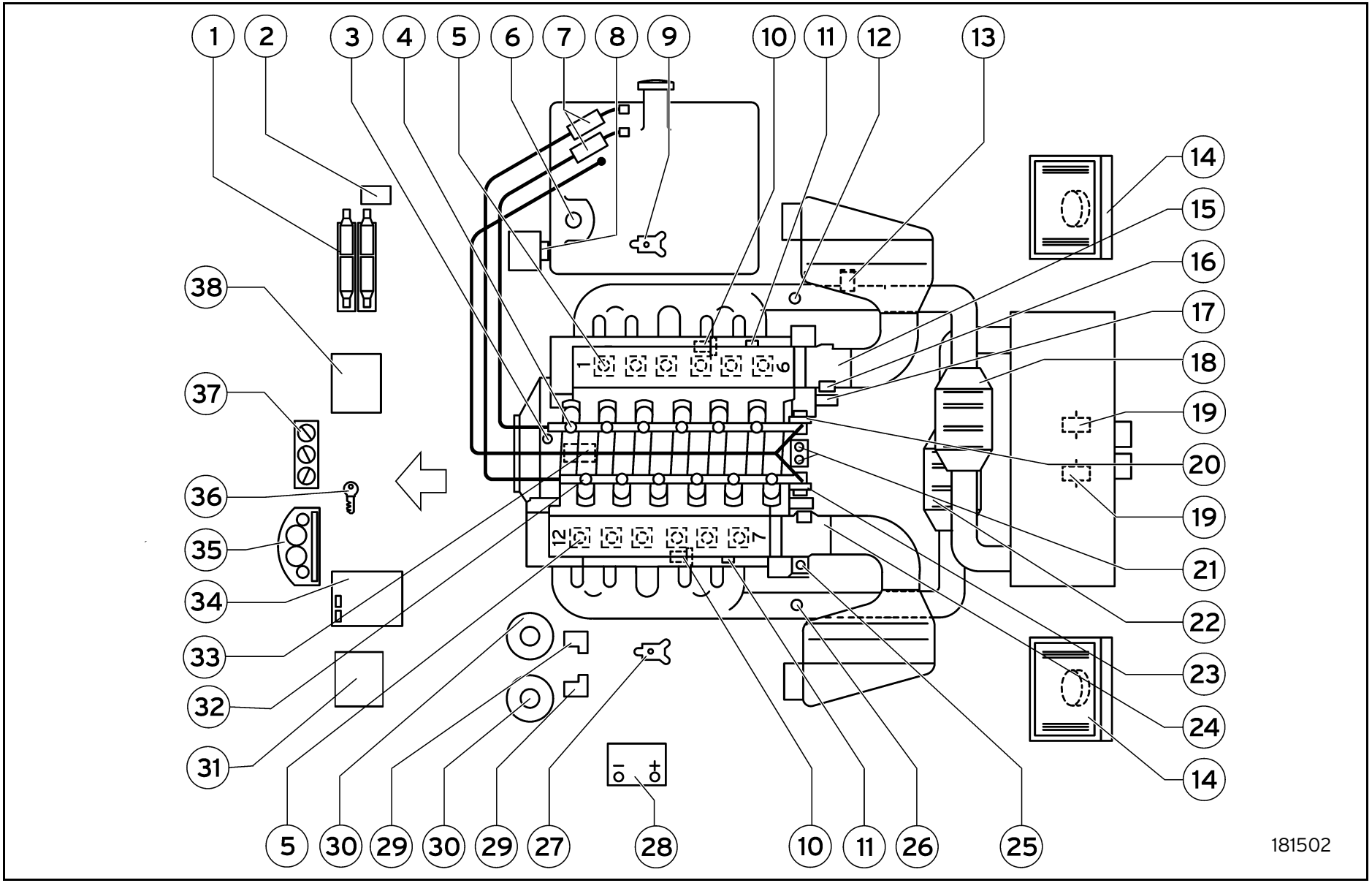


Fig. 2 - EEC engine control system function layout

Key
EEC engine control system function layout

1 Engine control ECU
2 Throttle position actuator ECU
3 Engine rpm and TDC sensor
4 Injectors block 1-6
5 Single ignition coil
6 Roll-over valve
7 Fuel pump
8 Fuel vapour pressure sensor
9 Absolute pressure sensor block 7-12
10 Exhaust gas pressure sensor
11 Air temperature sensor
12 Catalyser lambda sensor block 1-6
13 ENCS solenoid valve
14 Radiator fans
15 Throttle casing block 7-12
16 Throttle position sensor (single)
17 Timing variator solenoid valve block 1-6
18 Catalyser block 1-6
19 ENCS valve
20 Pressure regulator block 1-6
21 Coolant temperature sensors
22 Catalyser block 7-12
23 Pressure regulator block 7-12
24 Throttle casing block 1-6
25 Engine timing sensor
26 Catalyser lambda sensor block 7-12
27 Absolute pressure sensor block 1-6
28 Battery
29 Carbon canister washout solenoid valve
30 Carbon canister
31 Rear relay and fuse box
32 Injectors block 7-12
33 Throttle opening actuator
34 GFA ECU
35 Instrument connection
36 Ignition switch
37 Climate control system connection
38 Front relay and fuse box

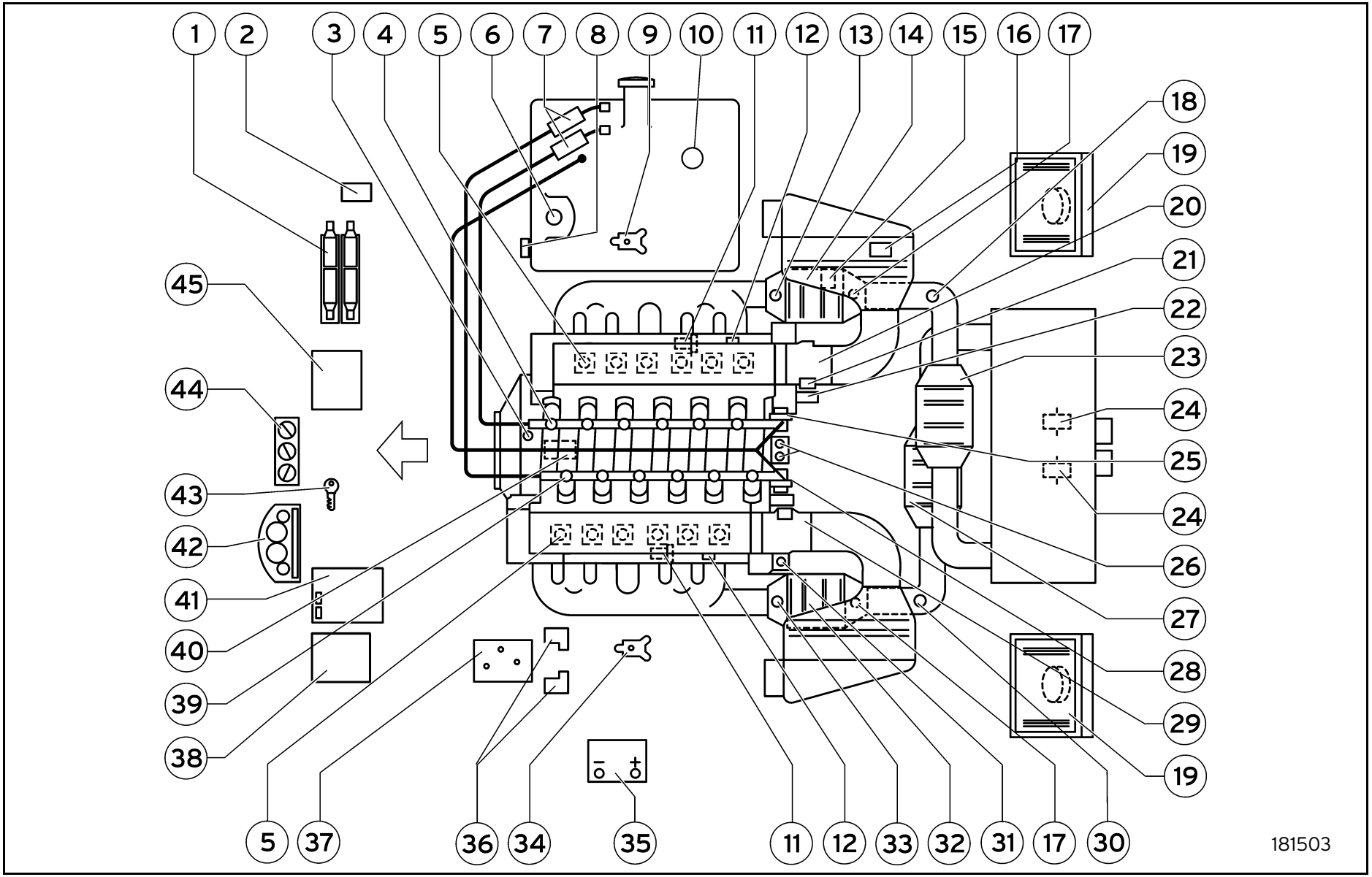


Fig. 3 - USA engine control system function layout

Key
USA engine control system function layout

1 Engine control ECU
2 Throttle position actuator ECU
3 Engine rpm and TDC sensor
4 Injectors block 1-6
5 Single ignition coil
6 Roll-over valve
7 Fuel pump
8 Fuel vapour pressure sensor
9 Absolute pressure sensor block 7-12
10 Floating valve
11 Exhaust gas pressure sensor
12 Air temperature sensor
13 Pre-catalyser upstream lambda sensor block 1-6
14 Pre-catalyser block 1-6
15 ENCS solenoid valve
16 Thermocouple control unit
17 Pre-catalyser thermocouple
18 Pre-catalyser downstream lambda sensor block 1-6
19 Radiator fans
20 Throttle casing block 7-12
21 Throttle position sensor (single)
22 Timing variator solenoid valve block 1-6
23 Catalyser block 1-6
24 ENCS valve
25 Pressure regulator block 1-6
26 Coolant temperature sensors
27 Catalyser block 7-12
28 Pressure regulator block 7-12
29 Throttle casing block 1-6
30 Pre-catalyser downstream lambda sensor block 7-12
31 Engine timing sensor
32 Pre-catalyser block 7-12 (USA)
33 Pre-catalyser upstream lambda sensor block 7-12
34 Absolute pressure sensor block 1-6
35 Battery
36 Carbon canister washout solenoid valve
37 Carbon canister
38 Rear relay and fuse box
39 Injectors block 7-12
40 Throttle opening actuator
41 GFA ECU
42 Instrument connection
43 Ignition switch
44 Climate control system connection
45 Front relay and fuse box

**Injection system**

The aim of the injection management strategies is to supply the engine with the correct quantity of fuel at the required moment according to the engine operating conditions.

The injection management is essentially the calculation of the injection time, the determination of the injection timing and the subsequent actuation through the injector command.
The "basic" injection time is calculated by a mathematical interpolation of the speed-load map: the values contained in the map, obtained experimentally, also depend on the injector specifications.
The "final" injection time is obtained by a calculation algorithm in which the "basic" time is corrected by coefficients that take into account the different engine operating conditions, which are indicated by the various sensors installed in the system.

Mixture titration check
(check in feedback, closed loop)

This strategy corrects the injection times so that the mixture titration fluctuates continually.
The frequency of the fluctuation changes according to the engine load and speed: it ranges in tens of Hertz.

The ratio below is the mixture ratio and is indicated with the Greek letter $\alpha$ (alpha):

$$\frac{\text{quantity of air taken in by the engine}}{\text{quantity of fuel injected}}$$

The ratio below is the stoichiometric mixture ratio and is indicated with $\alpha_{st}$:

$$\frac{\text{theoretical quantity of air to burn all the injected fuel}}{\text{quantity of injected fuel}}$$

The ratio below is the mixture titration and is indicated with the Greek letter $\lambda$ (lambda):

$$\frac{\text{quantity of air taken in by the engine}}{\text{theoretical quantity of air to burn all the injected fuel}}$$

The stoichiometric ratio depends on the type of fuel: for current unleaded petrol it is equivalent to approx. 14.7, that corresponds to a lambda titration = 1.
A "rich" mixture is when the quantity of air is less than the stoichiometric quantity and in this case we have lambda <1;
A "weak" mixture is when the quantity of air is greater than the stoichiometric quantity and in this case we have lambda >1.

The feedback operation (closed loop) permits the catalytic converters to operate efficiently. This operating condition also enables the engine control unit to run its self-learning function.

### Cold start and running

The injection time during the starter motor actuation is determined by a special mapping according to the coolant temperature: after ignition has taken place the system passes over to the standard speed-load mapping.
When there is a cold start, since there is a natural impoverishment of the mixture due to reduced evaporation and heavy condensation on the inner walls of the fuel intake manifold, the "basic" injection time is increased by a multiplying coefficient according to the engine temperature.

### Full load

The strategy is enabled when the throttle exceeds a certain threshold. The "basic" injection time is increased by a multiplying coefficient according to the engine speed.

### Acceleration and deceleration

Acceleration and deceleration are interpreted by the system as transient stages between two stationary conditions: this may be positive (acceleration) or negative (deceleration).
The transient strategy is very complicated since many factors have to be taken into consideration.
Usually the injection time is increased for positive transients and decreased for negative transients.
The size of the correction depends basically on the engine load variation: however also values such as throttle movement speed, engine speed, engine temperature (coolant and intake air) are also involved.

### Injectors control

The injectors control is a timed sequential type.

### Rpm limiting

The strategy limits the peak speed that can be reached by enabling the cut-off when the engine reaches this speed.
Peak rpm = 7800 rpm

Fuel pump control

Each of the fuel pumps is controlled by the engine control unit through a single relay.
The pump is stopped:

- if the engine speed goes down to less than 250 rpm approx.;
- after a certain time (about 3 seconds) with the key on MAR without starting up (timed enable)

Self learning

The control unit has a self-learning function that memorises any deviation between basic mapping and corrections set by the lambda sensor that persists during operation, within certain load and speed limits. These deviations (due to production tolerances and ageing of system and engine components) are permanently stored, enabling adaptation of the system operation upon progressive engine and component alterations compared to the original condition.

⚠ The self-learning strategy uses the signals coming from the lambda sensor to continually update a specific mapping contained in a special area of the memory, which contains the correction values to perform during the calculation of the final injection time.
If a control unit is replaced a road test is necessary to allow the engine to reach its temperature and so that the strategy can perform its self-learning.

**Activated carbon filter washing**

This strategy checks the position of the activated carbon filter washing solenoid valve in this way:

- with the engine hot the control unit controls the solenoid valve so as to check the quantity of fuel vapours sent to the intake (activated carbon filter washing), according to the engine speed and load. The system alternates washing periods with no washing periods: during the latter the self-adaptation strategy can be enabled under these conditions:
- during start-up the solenoid valve remains closed, preventing the fuel vapours from enriching the mixture;
- after a cold start the solenoid valve remains closed during the entire engine warming up.

**Ignition system**

The ignition control mainly consists of determining the spark advance required according to the engine operating conditions and its actuation by the piloting of the power transistor incorporated in the power module inside the engine control unit.
The spark advance calculated on the basis of the engine load and speed is then corrected according to different engine operating conditions.
Each coil primary is supplied by the battery voltage through a relay which, in its turn is controlled by the engine control unit: the earth connection is through the power transistor.

The engine control unit, after a cylinder TDC signal, sends a signal, with a certain delay, to the relevant power module, that starts at that moment (conduction start moment) to send current to the coil primary circuit to bring the value to about 6 Amperes (saturation current).
Obviously this moment varies in angle in relation to the bursting TDC of each cylinder since the dwell needed to saturate the current in the coil primary circuit is constant, whereas the time required by the engine to make two revolutions (cycle) reduces as the rpm increases.
The engine control unit signal remains until the moment of the desired spark advance on the specific cylinder.
The moment the control unit removes the signal to the power module, the current in the coil primary circuit is cut off. This, by induction, generates a sudden rise in voltage on the secondary circuit that is discharged to earth, generating a spark on the ignition spark plug.
Each cylinder has a coil fitted directly onto the spark plug without a high voltage cable.

⚠ The coils are operated when the engine is started in advance by a few cycles with respect to ignition. In a similar way, the coils are operated for a few additional cycles after the engine has been stopped.

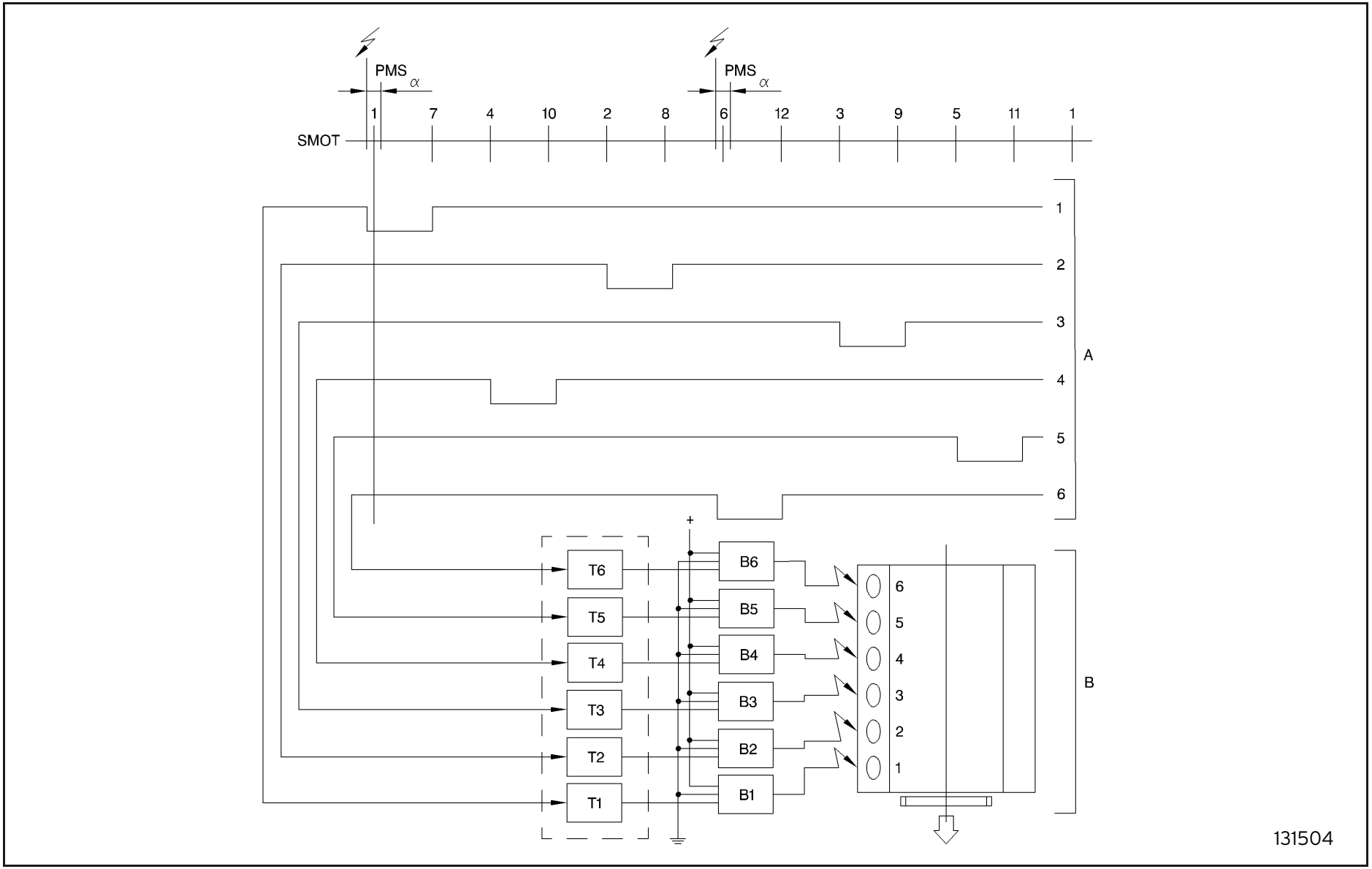


Fig. 4 - Ignition system functional layout (cylinder bank 1-6)

| | |
|---|---|
| SMOT: | crankshaft sensor/signal |
| a: | spark advance |
| A | cylinder bank 1-6 modules commands |
| B | cylinder bank 1-6 connection diagram |
| B1/../B6: | cylinder bank 1-6 coils |
| T1/../T6: | cylinder bank 1-6 power transistors |
| Firing order: | 1-4-2-6-3-5 |

The cylinder bank 7-12 commands are delayed by 60° of crankshaft in relation to cylinder bank 1-6 commands shown in the figure.

**Engine idle speed control**

The target is to hold the engine speed around the stored value, in its turn a reverse function of the coolant temperature, suitably changing the position of the throttle (cold engine) or the spark advance (hot engine).

- Start up and cold engine
  When the key is inserted, the throttle opening actuator opens the throttle of each throttle case by an amount that depends on the engine temperature, so as to ensure the amount of air needed to hold the set speed, according to the engine temperature.
  While heating, the actuator modulates the throttle position – and consequently the engine speed – until they close completely at an engine temperature of about 70 °C.
- Hot engine
  When the key is inserted, the throttle opening actuator opens the throttle of each throttle case sufficiently to ensure the quantity of air needed for a hot start-up.
  The engine idle speed is held steady close to the set value changing the spark advance so as to offset any speed fluctuations.

## ELECTRICAL/ELECTRONIC SYSTEM

**Engine speed and TDC sensor**
The sensor is fixed to the crankcase, engine flywheel side.

Operation principle
The sensor (fig. 5) consists of a tubular casing (1) inside which there is a permanent magnet (3) and an electrical winding (2).
The magnetic flow created by the magnet (3) due to the passing of the phonic wheel teeth, fluctuates according to the gap variation.
These fluctuations induce an electromotive force in the coil (2) at the ends of which alternate a positive voltage (tooth facing sensor) and a negative voltage (gap facing the sensor). The peak value of the output voltage depends, other factors remaining unaltered, on the distance between the sensor and the tooth (air gap).

⚠ Air gap: 0.75 ÷ 0.90 [mm]

The phonic wheel is locked so that the teeth arrive to the sensor with an advance of 10° in relation to the relevant bursting TDC (Fig. 6).

⚠ No adjustment can be made to the sensor angle position.

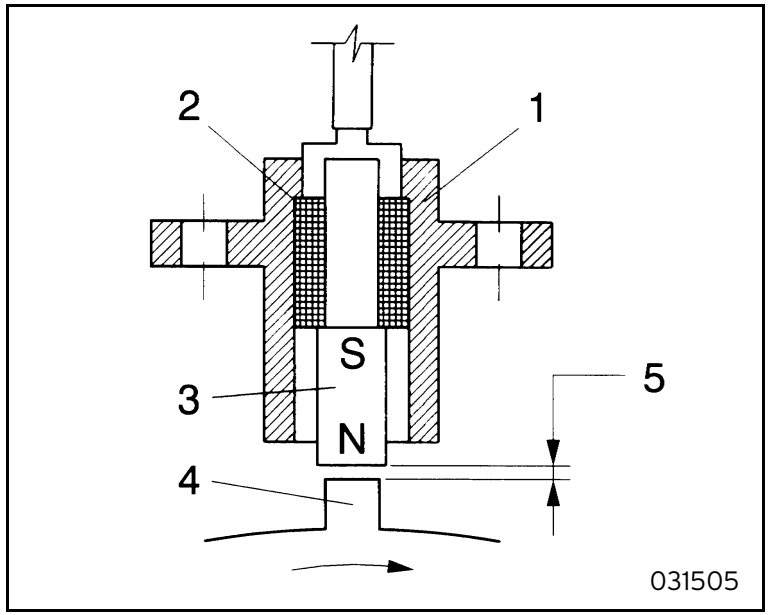


Fig. 5 - Speed and TDC sensor

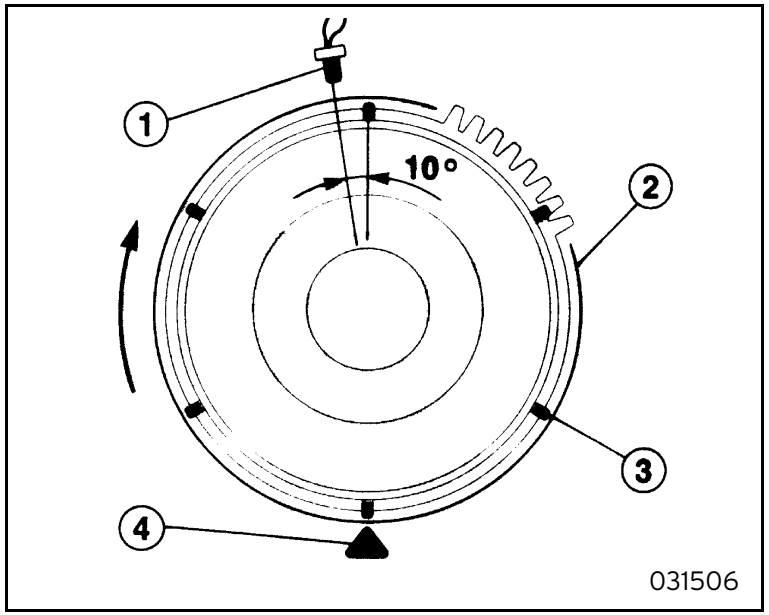


1 Sensor
2 Engine flywheel
3 Tooth
4 Reference on cup

Fig. 6 - Assembly diagram

**Engine timing sensor**

The timing sensors are installed on the end of the exhaust camshaft of the 7-12 cylinder bank. They are shifted by 30°, corresponding to the 60° of the two engine cylinder banks.

Operating principle

The operation is exactly the same as described for the speed and TDC sensor.

**Absolute pressure sensor**
The absolute pressure sensors are at the sides of the engine near the ignition coils of the respective cylinder banks.

Operating principle

The sensitive element, enclosed in a plastic container, consists of a Wheatstone bridge stencilled on a very thin ceramic plate (diaphragm) installed on the lower part of an annular support.
The diaphragm separates two chambers: in the lower chamber, which is sealed, a vacuum has been created, whereas the upper chamber is in direct communication through piping with the measuring point.
When operating, the pressure that generates on the measuring point produces a mechanical action on the sensor diaphragm which deflects, thus varying the resistor values.
Since the power supply is constant (+5 V) the resistor variation causes an output voltage variation (V) which is proportional to the pressure value.

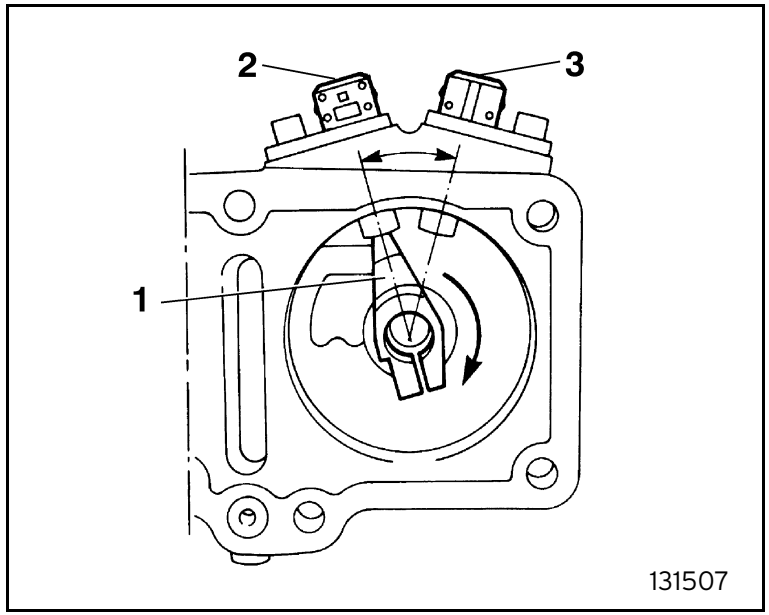

Fig. 7 - Timing sensor

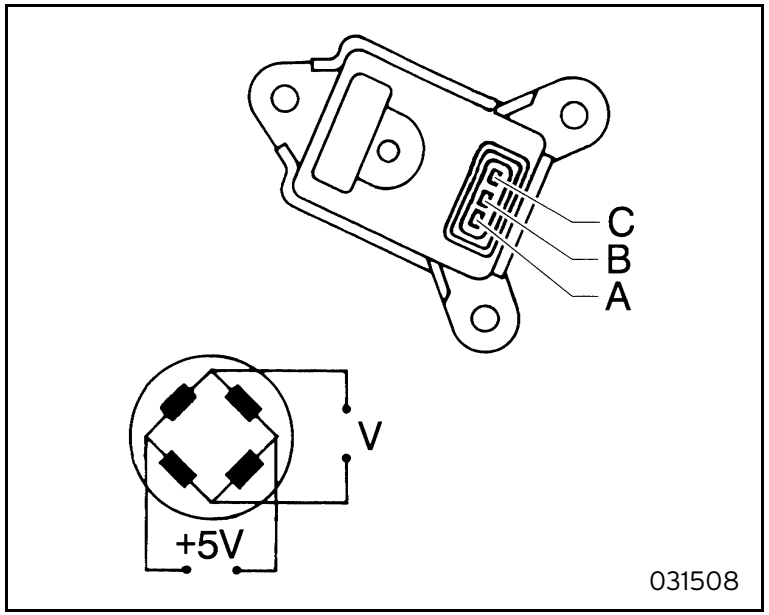

Fig. 8 - Absolute pressure sensor

1 Pulse generator eccentric
2 Cylinder bank 1-6 sensor
3 Cylinder bank 7-12 sensor

**Lambda sensor**

This is a sensor that generates an electric signal directly bound to the ratio between the oxygen in the exhaust gas and the oxygen in the outside air. Through this it is possible to find the deviation from the correct stoichiometric ratio of the air-fuel mixture sent to the cylinders.

Each cylinder bank has its own oxygen sensor installed on the exhaust gas inlet coupling in the catalytic converter of the exhaust system.

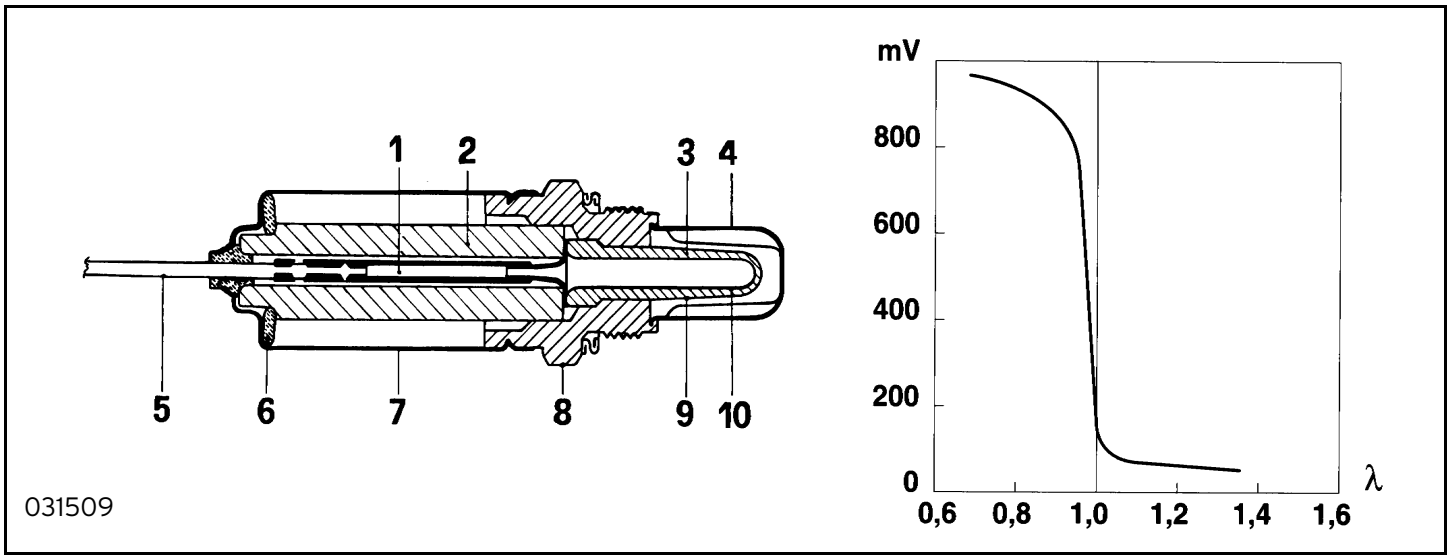


1 Contact
2 Ceramic support
3 Sensor ceramic
4 Protective pipe
5 Electric cable
6 Spring
7 External casing
8 Metal frame
9 Electrode
10 Electrode

Fig. 9 - Heated lambda sensor and characteristic curve

Once the operating temperature has been reached (between approx. 350 and 800°C) the generated electric signal fluctuates continually between 0 and 800 mV. In the case of weak mixture with too much oxygen in the exhaust gas, the output signal is low, less than 100 mV; if instead the mixture is rich – low oxygen content in the exhaust gas, the signal is high, over 800 mV.

To start its operation sooner, and to avoid the danger of splattering if the engine runs for a long time at idle speed, the lambda sensor is heated not only by the exhaust gas, but also by an electric resistor.

**Ignition coil**

The ignition circuit is static type with inductive discharge; the high voltage is provided by six pencil coils fitted directly onto the cylinder head for each block.

The coils have a magnetic closed circuit with the windings in a plastic container immersed in epoxy resin. Each coil is directly connected to the spark plug without high voltage cables.

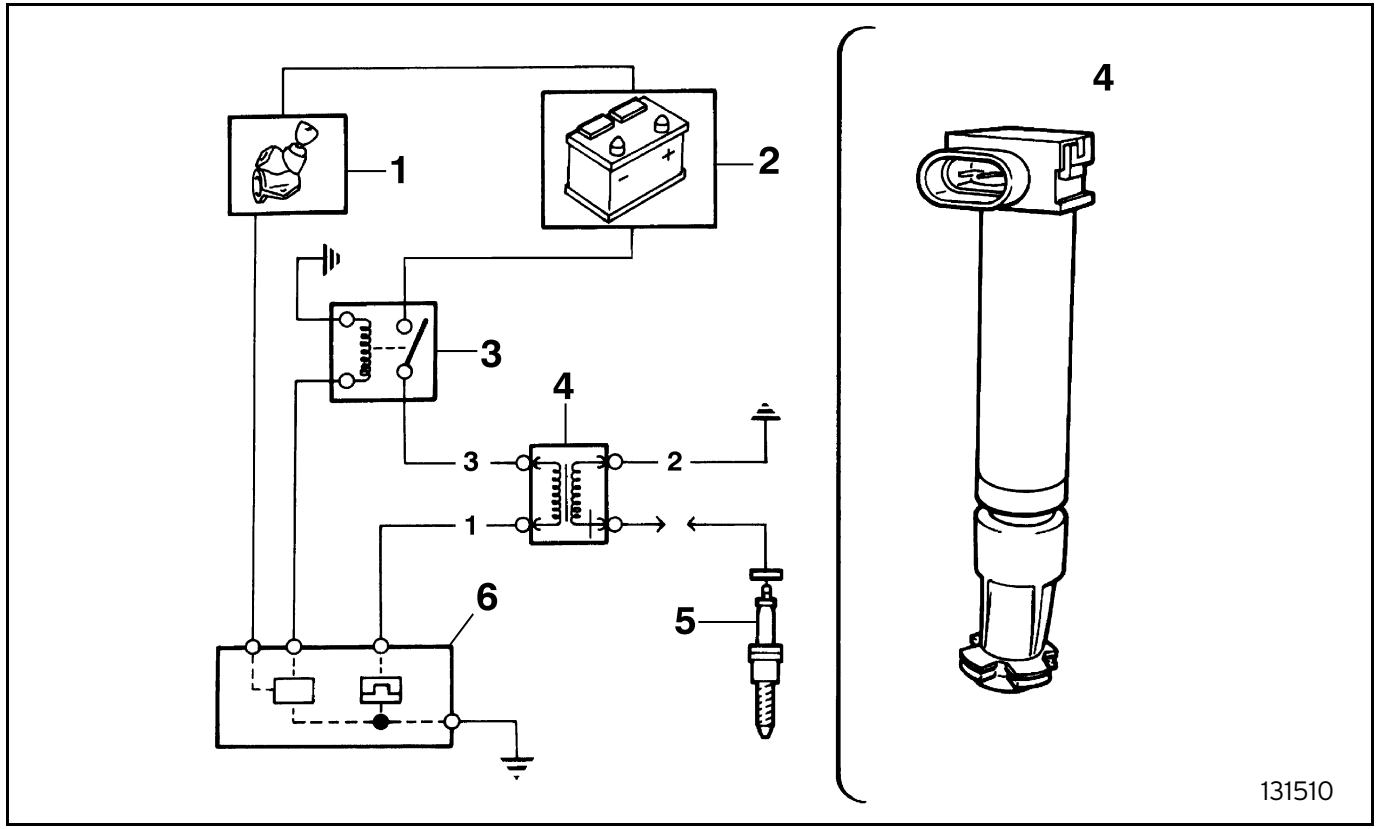


1 Ignition switch
2 Battery
3 Power supply relay
4 Pencil coil
5 Spark plug
6 Engine control unit

Fig. 10 - Pencil ignition coil

The coil primary circuit is supplied by relay, controlled by the engine control unit after it has acknowledged the rating signal coming from the relevant sensor (thus with engine rotating driven by the starter motor).

**Spark plugs**
It is most important to use spark plugs with a thermal degree and specifications that correspond to the standards. If another type of spark plug is used for replacement it must be verified that it has the same specifications as the original ones.

**Engine coolant temperature sensor**
The sensor is installed on the thermostat.
It has a brass body that protects the actual resistive element, which consists of an NTC thermistor (Negative Temperature Coefficient) in which electrical resistance decreases as there is an increase in temperature and of the relevant connector.

Operating principle

The reference voltage is 5 Volts: since the control unit input circuit has been designed as a voltage divider, the reference voltage is divided between a resistor in the control unit and the sensor itself.
As a result the control unit is able to assess the resistance variations of the sensor through the voltage changes, thus receiving information on the temperature.

**Intake air temperature sensor**
The sensor is installed on the intake manifold.
It has a synthetic material cage that protects the actual resistive element, which consists of an NTC thermistor (Negative Temperature Coefficient) in which electrical resistance decreases as there is an increase in temperature and of the relevant body with connector.

Operating principle

The operation is exactly the same as described for the coolant temperature sensor.

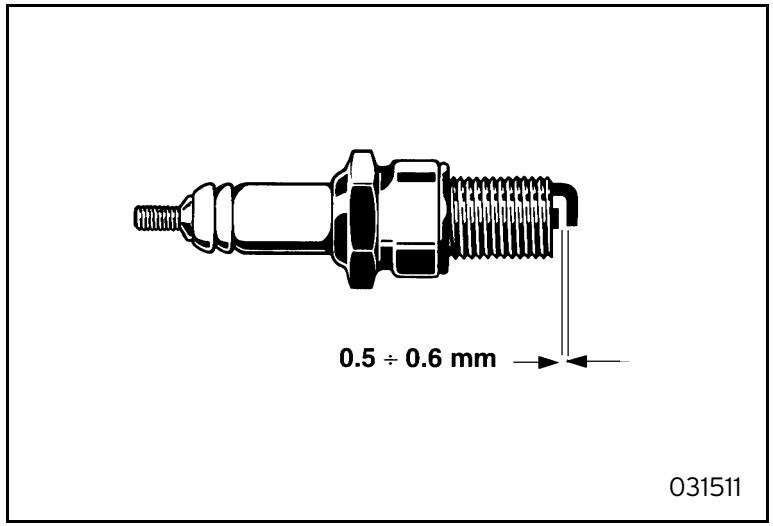


Fig. 11 - Spark plugs electrode gap

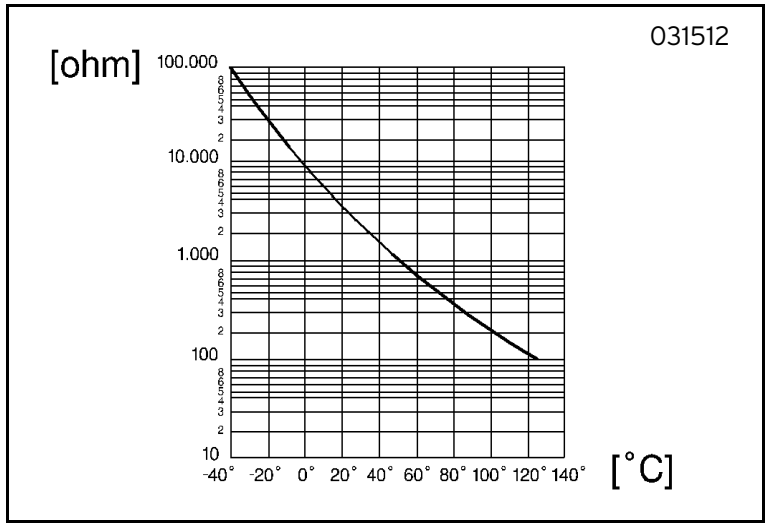


Fig. 12 - NTC type sensor characteristic curve

**GFA control unit**

The GFA control unit (Auxiliary Functions Management) is an on board computer that governs the operation of many devices. Moreover, the GFA is connected by CAN line to the LIE engine control unit and co-ordinates and manages many operations, especially concerning diagnostics.

The main functions controlled or co-ordinated by the GFA control unit are:

- cutting out accessory devices when the engine oil pressure is below 1 bar (pressure switch contact closed);
- key inserted check and sounding the beeper if the key is inserted and the driver's door open after at least one KEY ON;
- control of light intensity on the dashboard instrument panel;
- lights on check, activating the beeper if lights are on, key inserted and driver's door open;
- check on driver's side seat  belt with timed activation of buzzer and key inserted warning lamp;
- passenger compartment lights check;
- exhaust gas temperature in catalyst check (see GR.15 .– Engine Control);
- instruments (fuel level indicator) and other indicators check;
- front differential temperature check;
- lifting system check;
- ENCS system check;
- OBDII management;

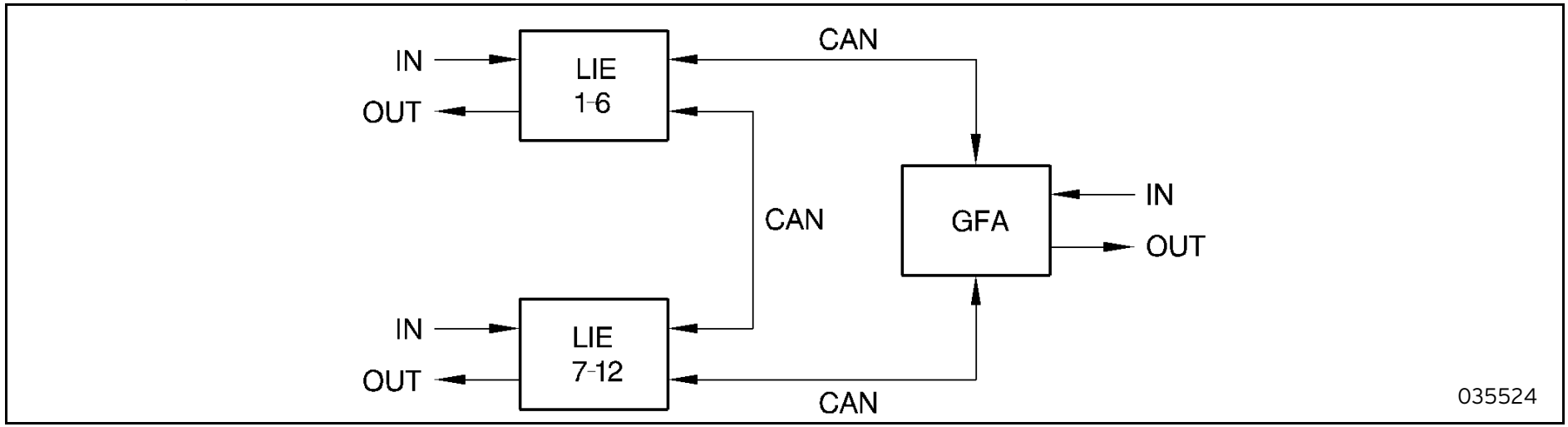


Fig. 13 - LIE - GFA control units connection diagram

## FUEL SUPPLY SYSTEM

The fuel supply circuit is divided into two parts and consists of the following:

- a tank;
- two independent delivery lines each with pre-filter, electric pump and fuel filter;
- two independent manifolds, each including fuel pressure regulator and six injectors;
- a return line in common.

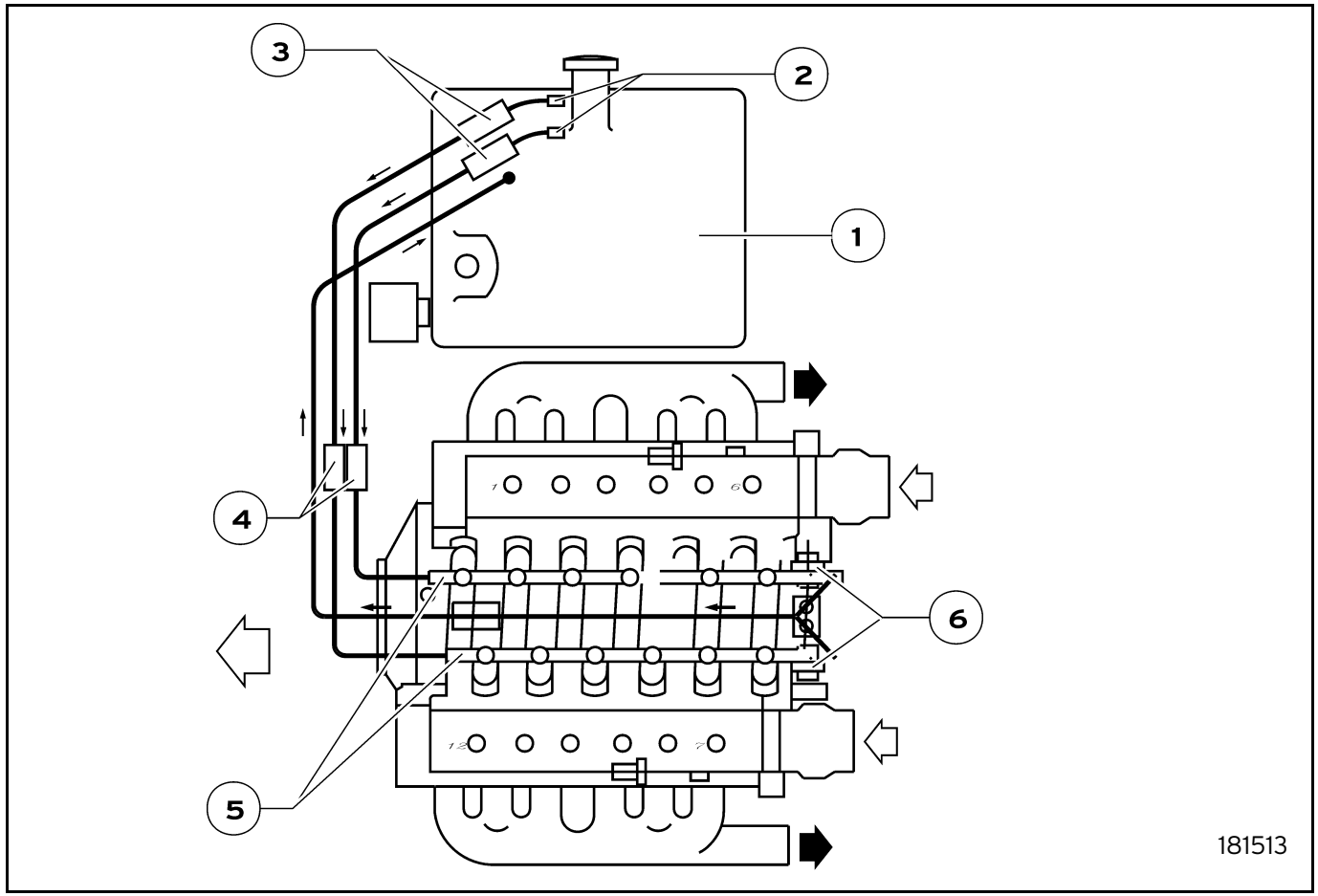


1 Tank
2 Pre-filter
3 Electric pump
4 Filter
5 Fuel manifold
6 Pressure regulator

Fig. 14 - Fuel circuit diagram

**Fuel pump**
The two fuel pumps are supplied by one relay. They are roller type positive displacement pumps with permanent magnet energising.

Inside the pump there is a pressure relief valve that short circuits the intake with the delivery if the pressure exceeds 5 bar.
The pump also has a non return valve that, for a certain period of time, can hold the system under pressure with the pump still. This valve is especially important since by holding the system pressure it prevents fuel vapour forming (vapour-lock) which causes damage when starting up with a hot engine.
At the pump intake there is a protective pre-filter installed.

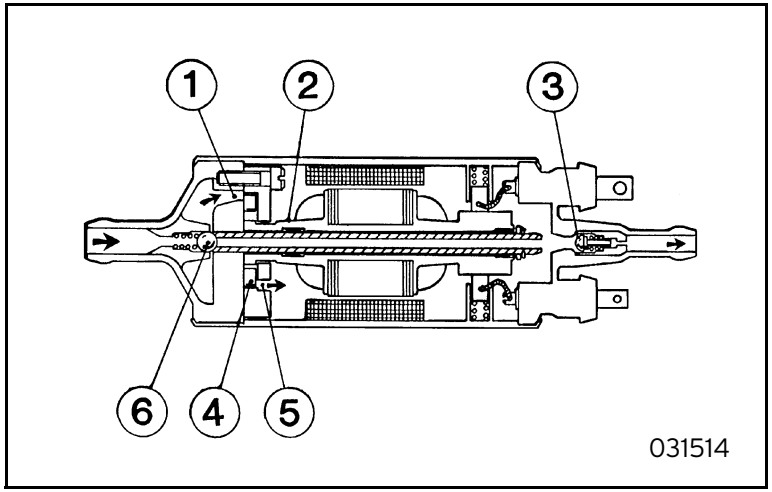


Fig. 15 - Fuel pump
1 Intake clearance
2 Impeller
3 Non return valve
4 Roller
5 Delivery clearance
6 Pressure relief valve

**Fuel filter**
The filter is fitted along the fuel delivery pipe downstream of the pump.
It consists of an aluminium foil wrapping and an internal polyurethane support around which is wound a powerful filtering element.

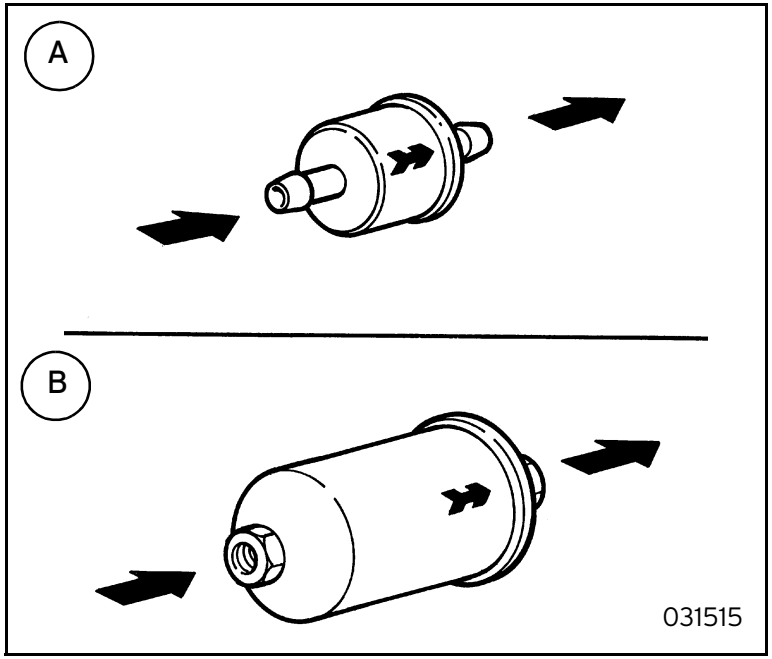


Fig. 16 - Fuel filter
A: Pre-filter
B: Filter
The arrow indicates direction of assembly

**Fuel manifold**

Each cylinder bank is fitted with a fuel manifold, that distributes the fuel to the injectors.

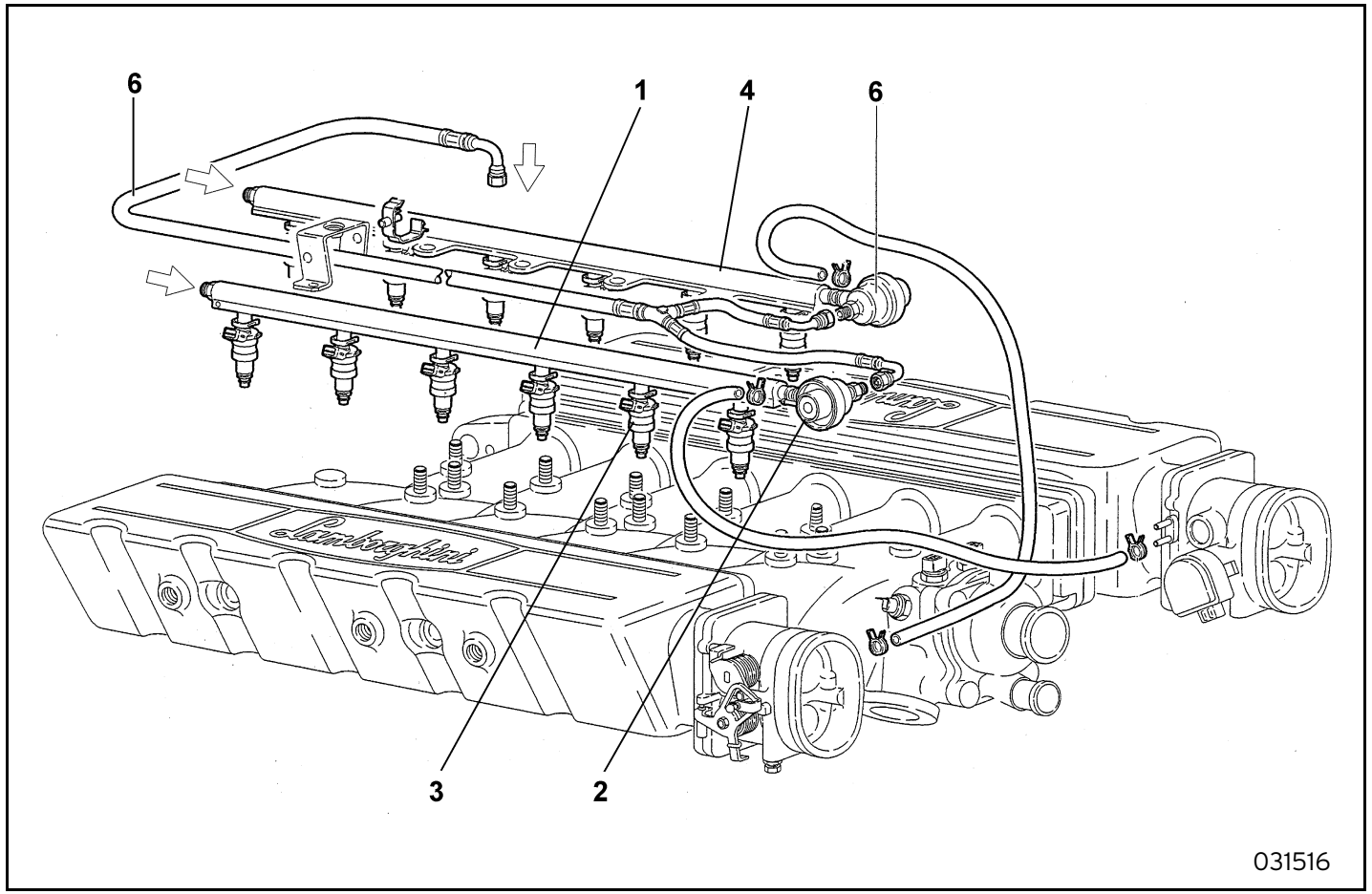


1 Cylinder bank 7-12 fuel manifold
2 Cylinder bank 7-12 pressure regulator
3 Injector
4 Cylinder bank 1-6 fuel manifold
5 Cylinder bank 1-6 pressure regulator
6 Return line

Fig. 17 - Fuel manifold

**Fuel pressure regulator**
This is a differential device with a diaphragm, located in the front part of each fuel manifold and adjusted in the factory to a pressure of 3.00 ± 0.05 bar.

The fuel under pressure coming from the pump pushes onto the diaphragm (3) of the downflow valve (4) opposed by the calibrated spring (2).When the pressure exceeds the set pressure, the downflow valve opens and the excess fuel returns to the tank.
Furthermore, through the pressure tap (1) the vacuum in the intake manifold (where the injector shutter is also located), operating on the regulator diaphragm, proportionally reduces the load from the calibrated spring.
In this way the pressure difference is kept constant between the fuel and the environment in which the injector is located (intake manifold) under all engine operating conditions.

⚠ The fuel pressure is taken as a fixed parameter, i.e. not checked by the control unit when calculating the quantity of injected fuel: therefore the regulator must not be tampered with to avoid altering the engine metering.

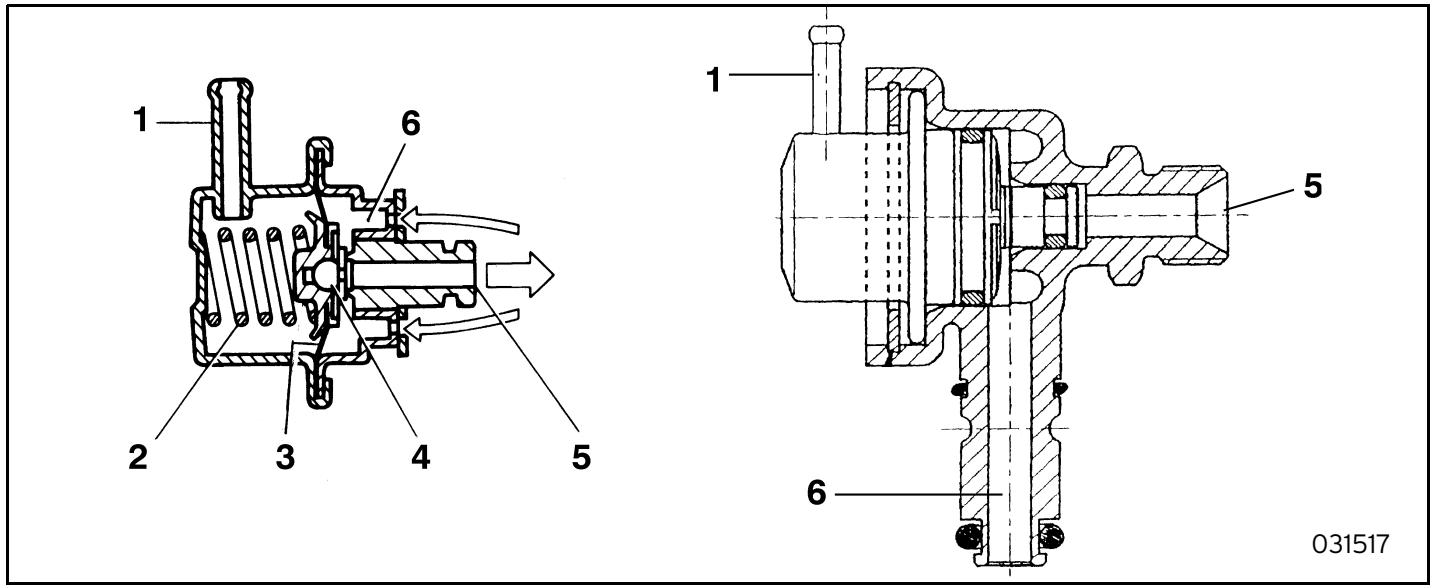


1 Vacuum signal tap
2 Calibrated spring
3 Diaphragm
4 Downflow valve
5 Fuel return
6 Fuel inlet

Fig. 18 - Pressure regulator

**Injectors**

The task of the injector is to deliver the amount of fuel required for the engine operation: the fuel is injected into the intake duct, immediately upstream of the intake valves.
As the pressure differential is constant between inside and outside the injector (due to the regulator), the quantity of fuel delivered, with the same electric power depends only on the opening time, established by the control unit.

The injector is the "top-feed" type with the fuel fed from the rear of the body (8) where the electric winding (4) is also located, connected to connector (5). The needle (2) integral with the anchor (3) is thrust against the seal seat by a spring (9).
When current passes through the winding the magnetic field created attracts the anchor (3) and as a consequence the needle (2) opens the injector and the fuel flows through.
When the current ceases, the shutter is called back into position by the spring (9).

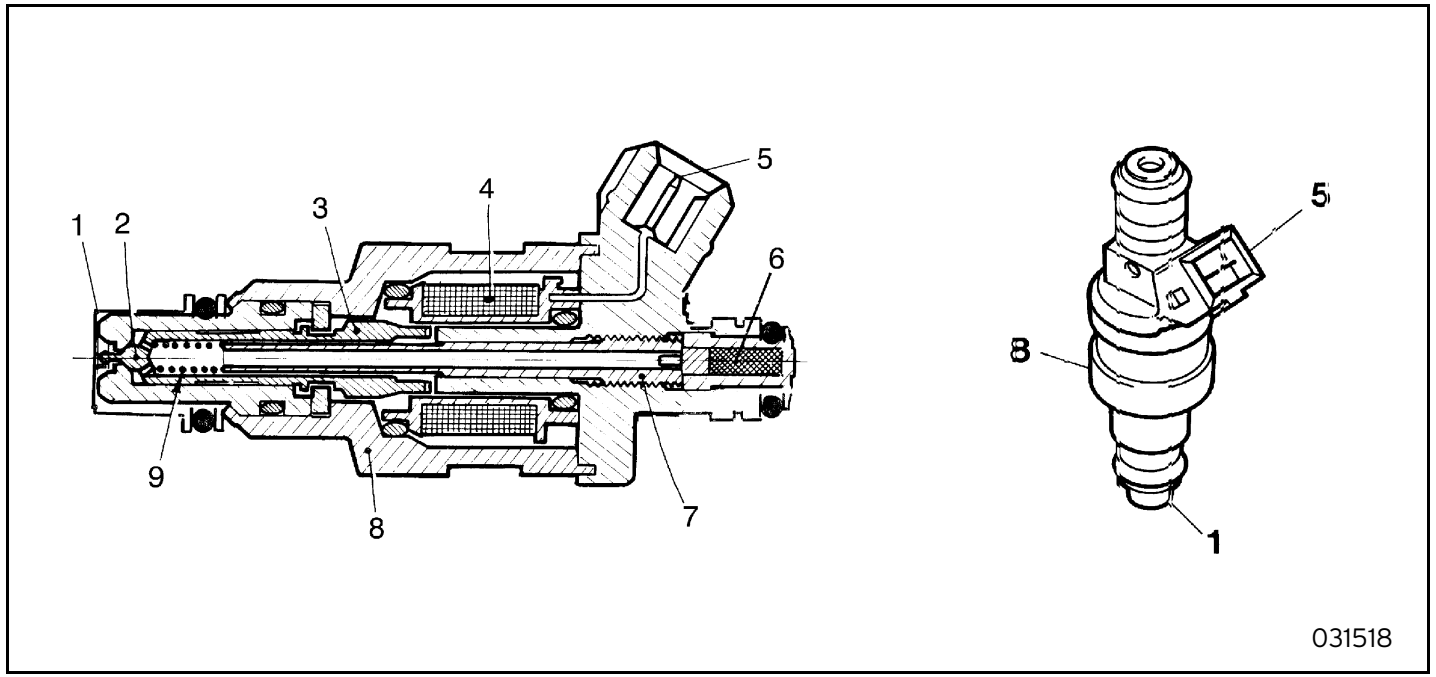


1 Snug
2 Needle
3 Magnetic anchor
4 Winding
5 Connector
6 Filter
7 Spring thruster
8 Body
9 Contrast spring

Fig. 19 - Injector

## INTAKE SYSTEM

The intake circuit is divided into two parts and consists of the following:

- Two air cleaners with connecting sleeves to the relevant throttle case;
- Two intake manifolds, each of which has the throttle case and fuel manifold fitted on it;
- One throttle position actuator.

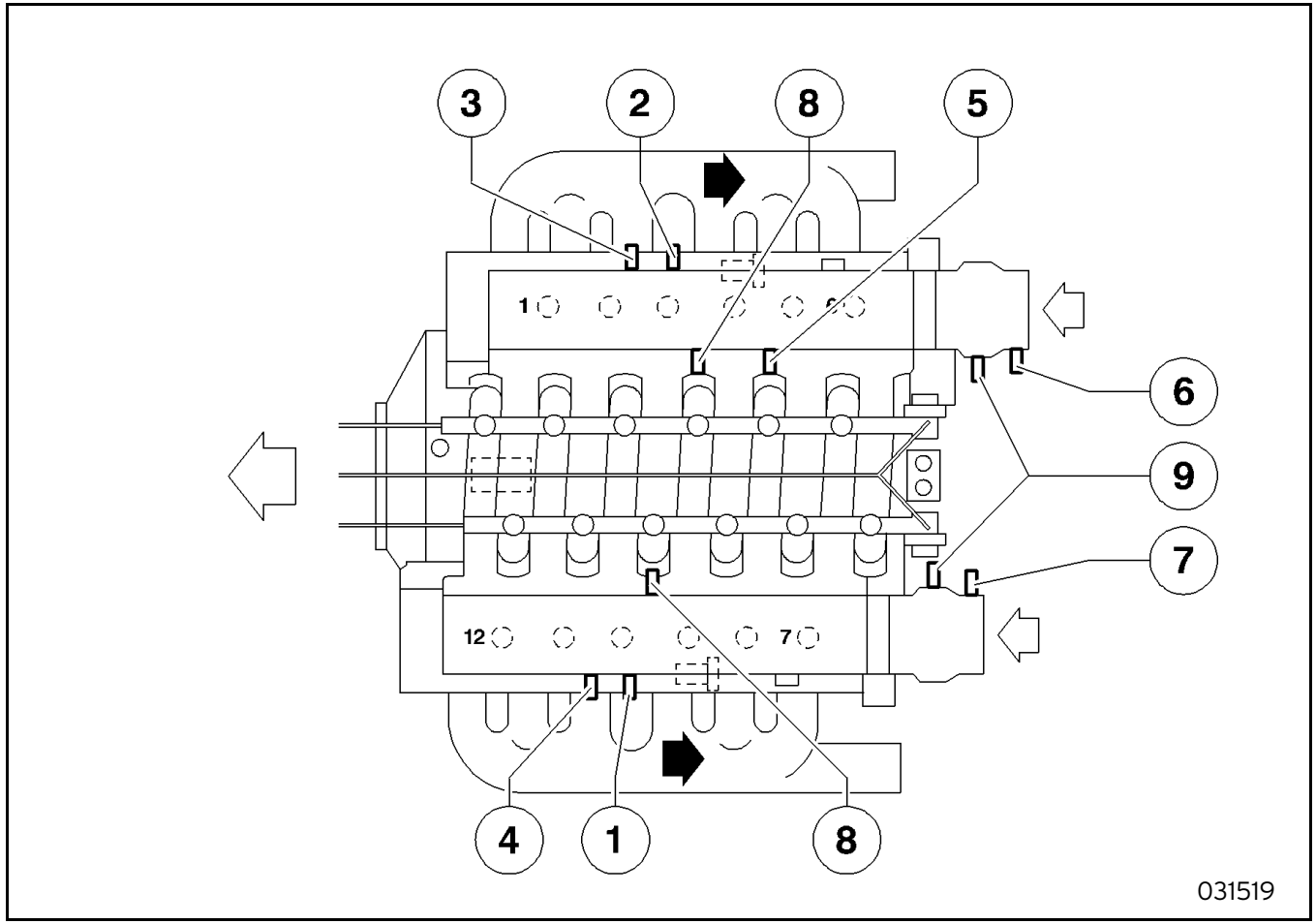


1 Brake booster
2 Service vacuum (vacuum tank)
3 Activated carbon filter solenoid valve
4 Activated carbon filter solenoid valve
5 Oil vapours recirculation
6 Not used
7 Canister washing valve
8 Absolute pressure sensor
9 Fuel pressure regulator

Fig. 20 - Intake manifolds pneumatic connections

**Throttle opening actuator (CARTER MOTOR)**

The actuator, the same for both blocks, is fitted in the middle of the blocks, in a position opposite to the timing.
It consists of an electric motor (1) controlled by a specific control unit that adjusts the throttle position by means of control levers (2) through a push rod (3). The angle position of the throttles is checked through a signal coming from the throttle position sensor.
The push rod has a microswitch that opens when the throttles stop against the anti-crawling screw.
When the engine is hot there should be a clearance of 6-8 mm between push rod (3) and lever (2).

Operating principle

The CARTER MOTOR device operates on the accelerator control for a certain time only after engine ignition.
The driver control unit (CARTER DRIVER) acts as an interface to the engine control unit to control the CARTER MOTOR.
The operating strategy of this device is co-related to the time that passes from engine ignition and the different temperatures picked up by the engine control sensors.
The CARTER MOTOR uses these parameters to bring the accelerator opening to a calculated value. This decreases as time passes, and the accelerator control is released when the engine reaches the correct rpm.
In this condition the microswitch does not sense the contact with the accelerator levers and deactivates its electric circuit, de-energising the control relay.
If there is a fault, a recovery function of the device is activated.

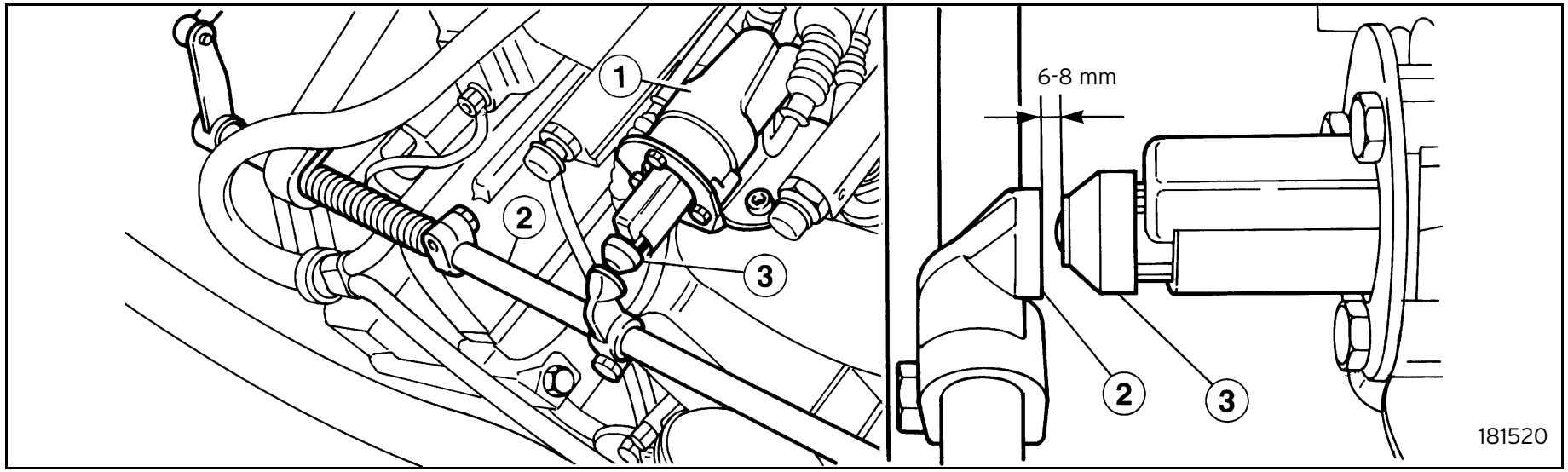


Fig. 21 - Throttle opening actuator

The injection system goes into stand-by after a CARTER MOTOR microswitch test.
This test causes and induces the system to detect a certain number of microswitch openings and closings after the engine has been shut off and the ignition key is in OFF position.
As a consequence it is perfectly normal to note a slight movement of the accelerator rods immediately after the engine has been switched off.

If the CARTER MOTOR is disconnected, the system activates the code in OBDII P1503, therefore it is not possible to accelerate the engine since the feed has been cut off, causing the activation of code P1508 in OBDII.

**Throttle case**
This meters the amount of air taken in by the engine (and therefore the power that this develops) according to the driverís requirement through the accelerator pedal.
The throttle case, fixed to the intake manifold, has two throttles (1) with differed opening: the throttles are opened by a kinematic system (2) that performs a progressive opening law (partial opening of the first throttle for most of the accelerator pedal stroke, and full opening of both throttles for the last part of the stroke).
With the pedal fully released (engine released or idling) the throttle opening lever stops against an anti-crawl screw (3). On the right-hand case a throttle position sensor is installed.

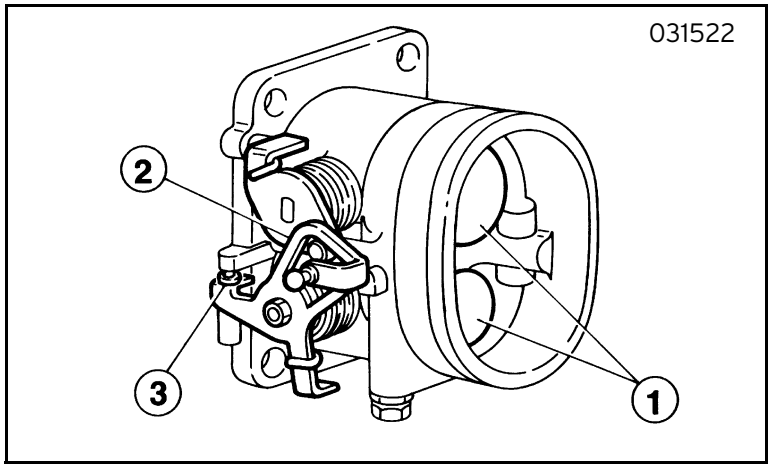

Fig. 22 - Throttle case

**Throttle position sensor**
This consists of a potentiometer supplied with 5V from the control unit, this potentiometer sends an output voltage to the control unit that varies according to the throttle position.
The control unit makes an electronic reset when the throttle is in closed position.
The angle position of the sensor can be adjusted.

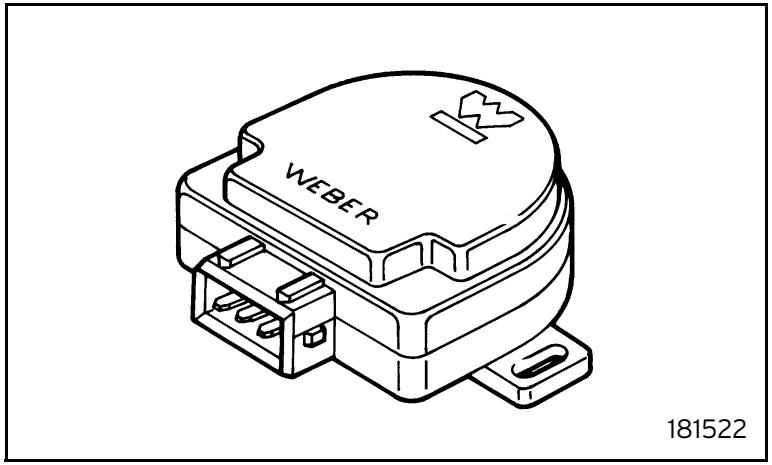


Fig. 23 - Throttle position sensor

## EXHAUST SYSTEM

The exhaust system consists of these parts:

- six in two in one insulated manifold;
- catalytic converter with pre-catalyst (USA) or single (EEC)
- exhaust silencer.

⚠ Coming out from the silencer, the gas taken from the right-hand exhaust pipe comes from cylinder bank 1-6, whereas that taken from the left-hand exhaust pipe comes from cylinder bank 7-12.

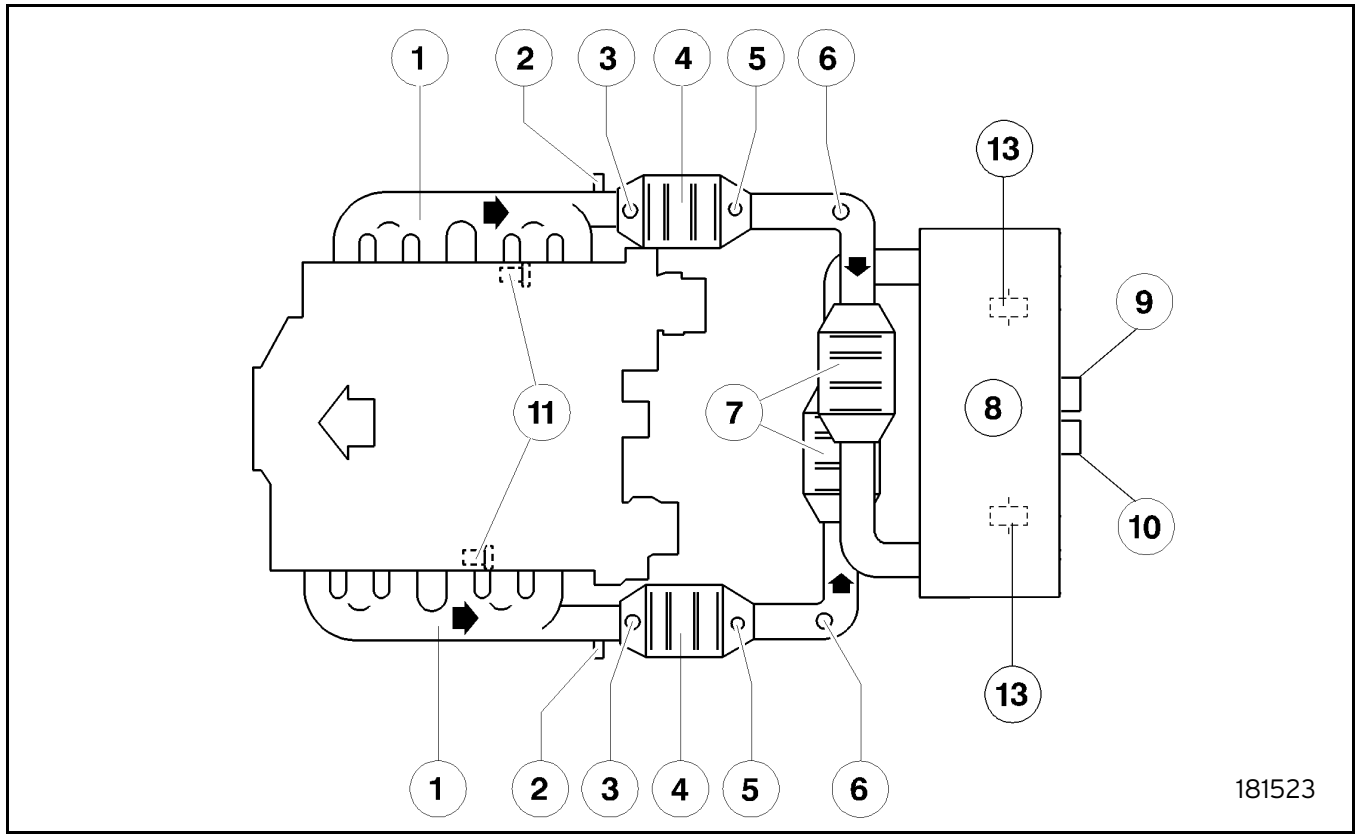


1 Exhaust manifold
2 CO pick-up pipe
3 Lambda sensor upstream of the pre-catalyst
4 Pre-catalyst
5 Thermocouple
6 Lambda sensor downstream of the pre-catalyst
7 Catalytic converter
8 Exhaust silencer
9 Cylinder bank 7-12 exhaust terminal
10 Cylinder bank 1-6 exhaust terminal
11 Exhaust gas pressure sensor
12 ENCS solenoid valve
13 ENCS valve

Fig. 24 - Exhaust system with catalytic converters (USA)

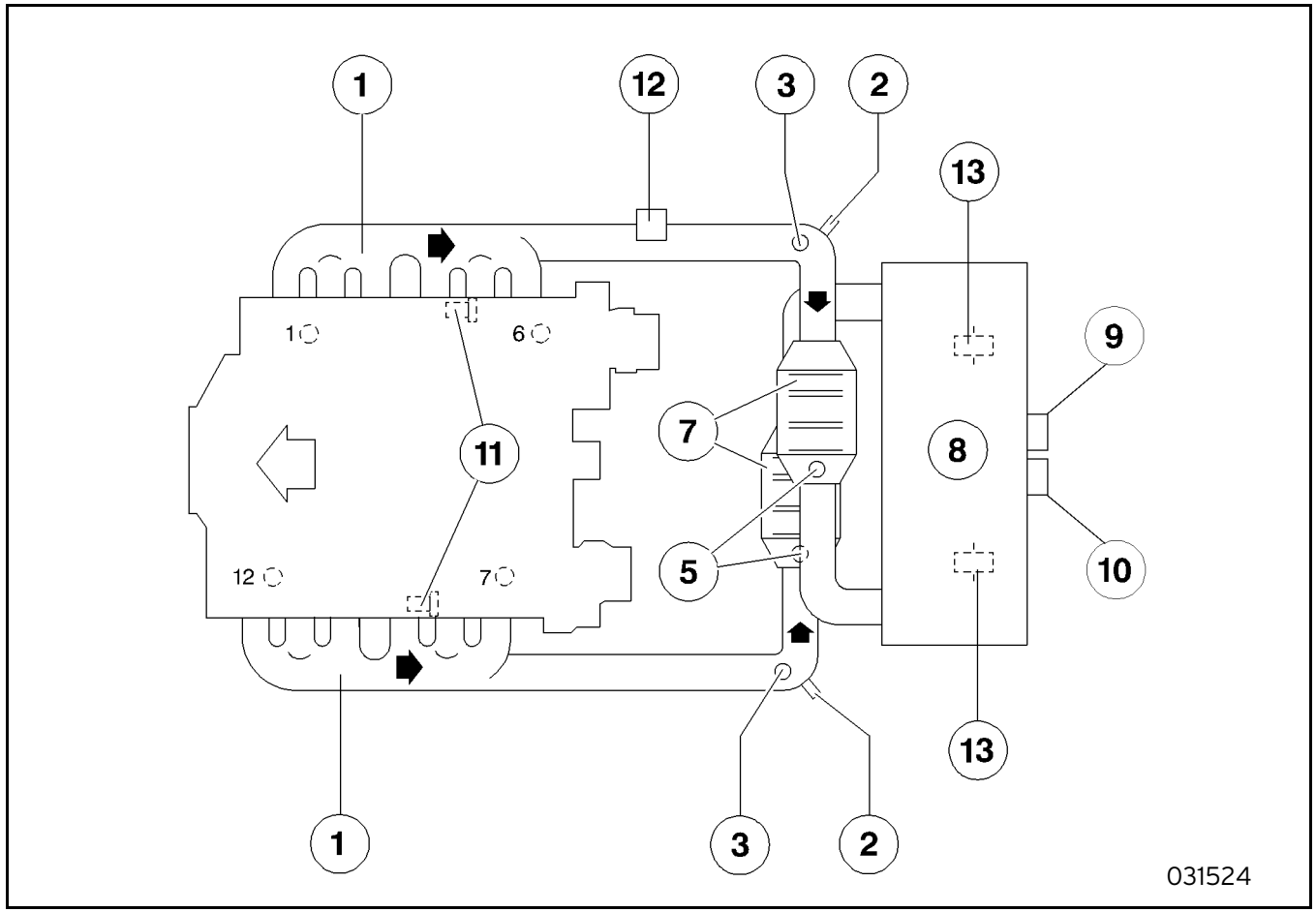


1 Exhaust manifold
2 CO pick-up pipe
3 Catalyst lambda sensor
4 Not used
5 Thermocouple
6 Not used
7 Catalytic converter
8 Exhaust silencer
9 Cylinder bank 7-12 exhaust terminal
10 Cylinder bank 1-6 exhaust terminal
11 Exhaust gas pressure sensor
12 ENCS solenoid valve
13 ENCS valve

Fig. 25 - Exhaust system with catalytic converters (EEC)

⚠ Coming out from the silencer. the gas taken from the right-hand exhaust pipe is relevant to block 1-6 and that taken from the left-hand exhaust pipe is relevant to block 7-12.

**Catalytic converter**

The catalytic converter is a device that simultaneously damps the three main pollution components in the exhaust: unburnt hydrocarbons (HC), carbon monoxide (CO) and nitrogen oxides (NOx).

Inside the catalyst two chemical reactions take place:

- oxidising of the CO and HC, converted to carbon dioxide (CO2) and water (H2O);
- reduction of the NOx converted into nitrogen (N2).

These reactions are possible in a very short time due to the presence inside the structure (metal block) of the catalyst, of a coating of active substances (platinum and rhodium) that considerably speed up the conversion of the harmful substances.

The efficiency of this conversion process however, depends on the fact that the mixture titration that is used by the engine continually fluctuates around the stoichiometric value that is obtained by the feedback carried out by the control unit based on the lambda sensor signals.

Moreover the conversion processes take place with temperatures over 300 to 350°C: therefore it is essential that the catalyst reaches this temperature as soon as possible so as to operate correctly.

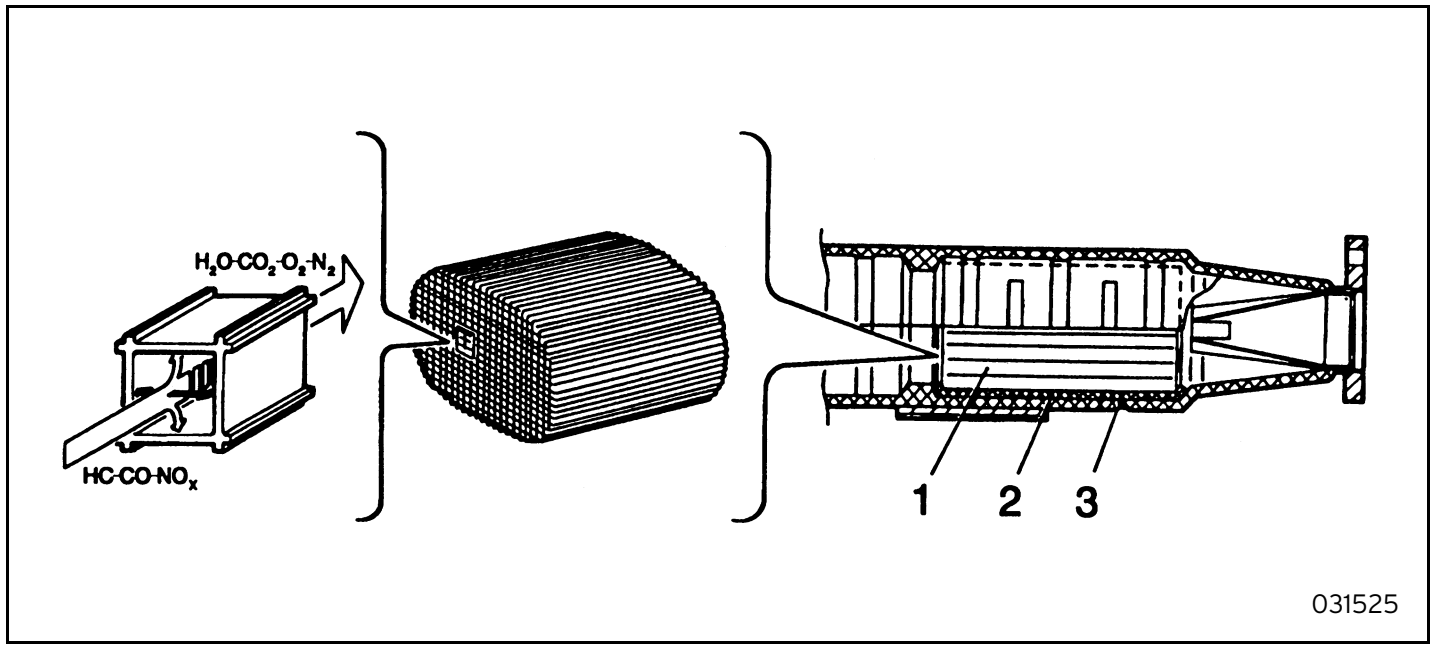


1 Metal block
2 Metal support
3 External steel wrapping

Fig. 26 - Catalytic converter

The catalyst inner part causes of destruction are mainly two:
- lead in the fuel, that lowers the conversion level to practically nothing ("lead poisoning") and irreparably damages the lambda sensor also;
- completely unburnt fuel in the exhaust gas, due to misfiring. This causes an increase in temperature such that it causes the melting of the ceramic support. As a consequence the connector must never, in any circumstances, be disconnected from the coils when the engine is running.

**Exhaust gas temperature control device**

On the exhaust piping coming out from the converter there is a thermocouple to read the temperature. This thermocouple generates a signal in proportion to the exhaust gas temperature and sends it to a special electronic control unit that switches on the "CATALYST RIGHT" or "CATALYST LEFT" warning light to which it is connected.

If there is an abnormal temperature increase in one of the converters the control unit intervenes as follows:
- for temperatures ranging between 900 and 940 °C the "CATALYST" warning light switches on intermittently: in this case it is necessary to slow down the car until the light switches off then find the cause of the exhaust system overheating.
- for temperatures over 940 °C the "CATALYST" warning light remains with a fixed light and the fuel is cut off to the injectors of the relevant cylinder bank: in this case it is necessary to stop the car and find the cause of the exhaust system overheating.

The "CATALYST" warning lights are tested and switch on for about two seconds whenever the ignition key is turned to "MARCIA".

If the warning light does not switch on or remains on after the initial check, this warns the driver that one of the two temperature control systems is not working efficiently.

**Exhaust noise control system ENCS**

Each exhaust silencer has a device fitted with an on-off valve piloted by the engine control unit, its purpose being to reduce the engine exhaust noise.

The device is based on a variable geometry system that splits the exhaust pipe into two pipes of different lengths that join together again just before the terminal. One of these can be intercepted by a throttle valve.

The control unit, under certain running conditions , sends an electric command to a solenoid valve which in its turn pneumatically controls the choking throttle.

The operating principle is as follows:

- with medium-low engine rpm the on-off valves are closed; in this way two resonance pipes (2) and (3) are created in parallel to the main piping (1) that act as damping resonators for the medium frequencies.
- at high engine rpm the valves are open; the two pipes, of different lengths, damp the noise due to an interference effect (the sound pressure waves remain staggered by half a wave length in relation to the terminal).

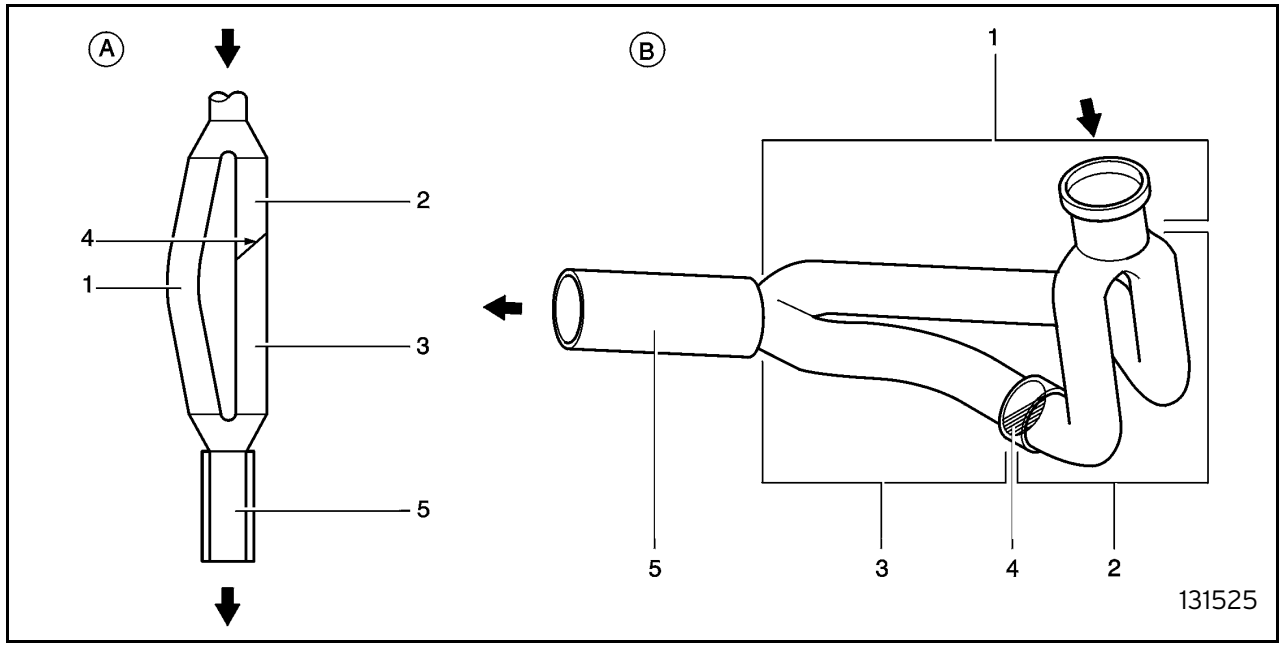


A Diagram
B Lay-out
1 Main pipe (without throttle)
2 First resonance pipe (with throttle closed)
3 Second resonance pipe (with throttle closed)
4 Intercepting throttle
5 Terminal

Fig. 27 - Exhaust noise control system ENCS

## ANTI-EVAPORATION DEVICES

**Recycling system for gas coming from the crankcase (blow-by)**
The system checks the crankcase gas emissions which are a mixture of air, fuel vapours and exhaust gas that seep out from the piston rings, and lubrication oil vapours which are sucked back and burnt by the engine.
The gases from the crankcase rise to the cylinder head, are conveyed in ducts to the separator (1) under the intake manifold, where they lose part of the oil content which returns to the sump through a drain pipe (4).
The remainder is taken in:

- through the duct (2) directly into the intake manifold when the engine is running with a low load;
- through the duct (3) upstream of the left-hand air cleaner when the engine is running with heavy loads.

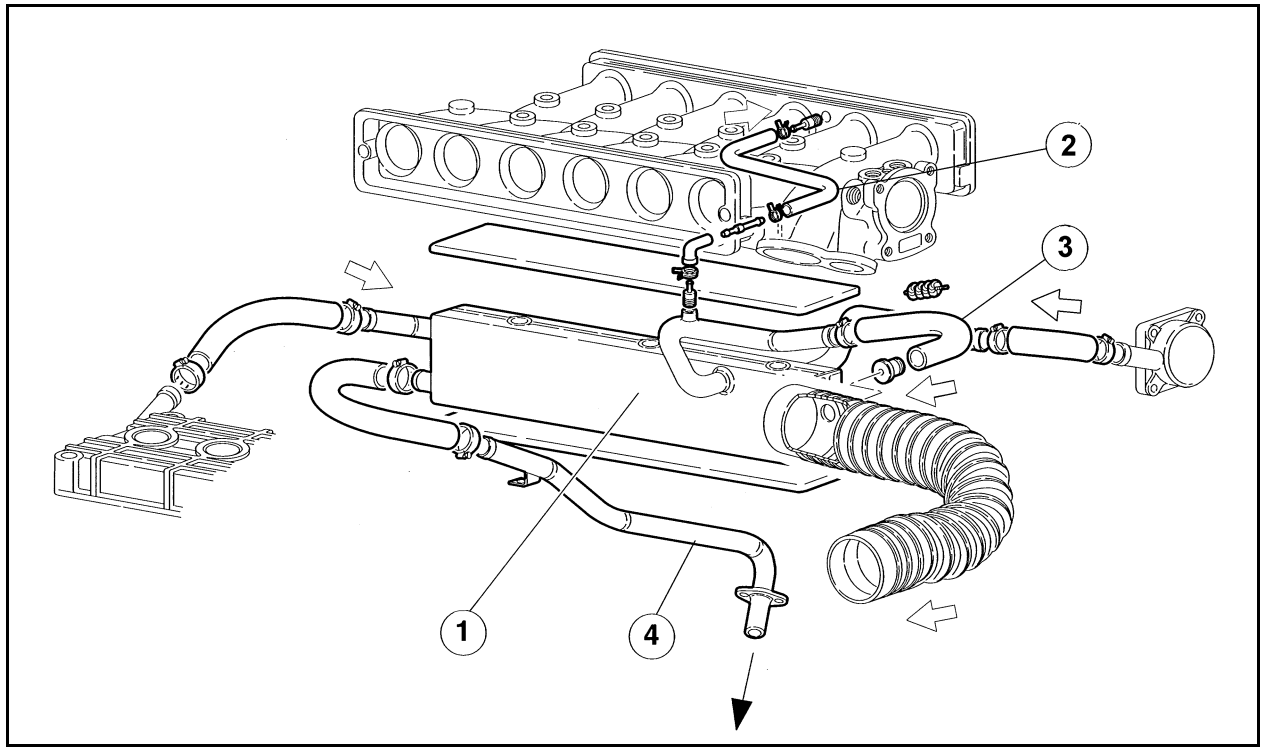


1 Oil vapours separator
2 Vapours intake duct to manifold
3 Vapours intake duct to air cleaner
4 Oil return to sump pipe

Fig. 28 - Oil vapours recirculation

**Fuel anti-evaporation system**

The anti-evaporation system prevents the fuel vapours, which consist of the lightest fractions of the hydrocarbons that form in the tank, from discharging into the atmosphere.
The system operates especially when the outside temperature is high and the fuel temperature rises, thus increasing the tendency to evaporate.

Operating principle

The fuel vapours that form in the tank are either conveyed by a roll-over valve installed directly on the tank and a duct to the separator, where the liquid portion can return to the tank, and to an active carbon canister (EEC version), or by a roll-over valve directly to the single active carbon canister (USA version).

The roll-over valve has these functions:

- It prevents the fuel from reaching the separator in the case of hard acceleration/deceleration when the car has a full tank, or from spilling from the tank, in case the car rolls over.
- It allows the vapours to pass from the tank to the separator.
- It enables the discharge into the atmosphere of any excess pressure should this be created in the tank (bad functioning of the washing valve, clogged pipe).

With the engine running, each solenoid valve is piloted in duty-cycle by the engine ECU according to engine ratio and load putting either the respective canister (which washing valve is kept open by the pressure in the intake manifold, EEC version) or the single canister in communication with the intake manifold. In this way, the vacuum takes in the vapours trapped in the canister.

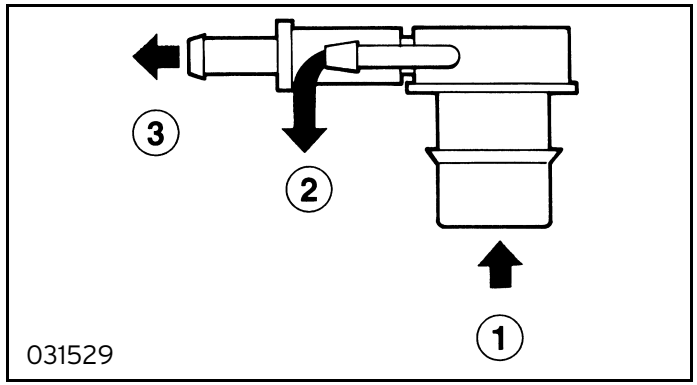


1 From the tank
2 To the separator
3 Discharge into the atmosphere

Fig. 29 - Roll-over valve

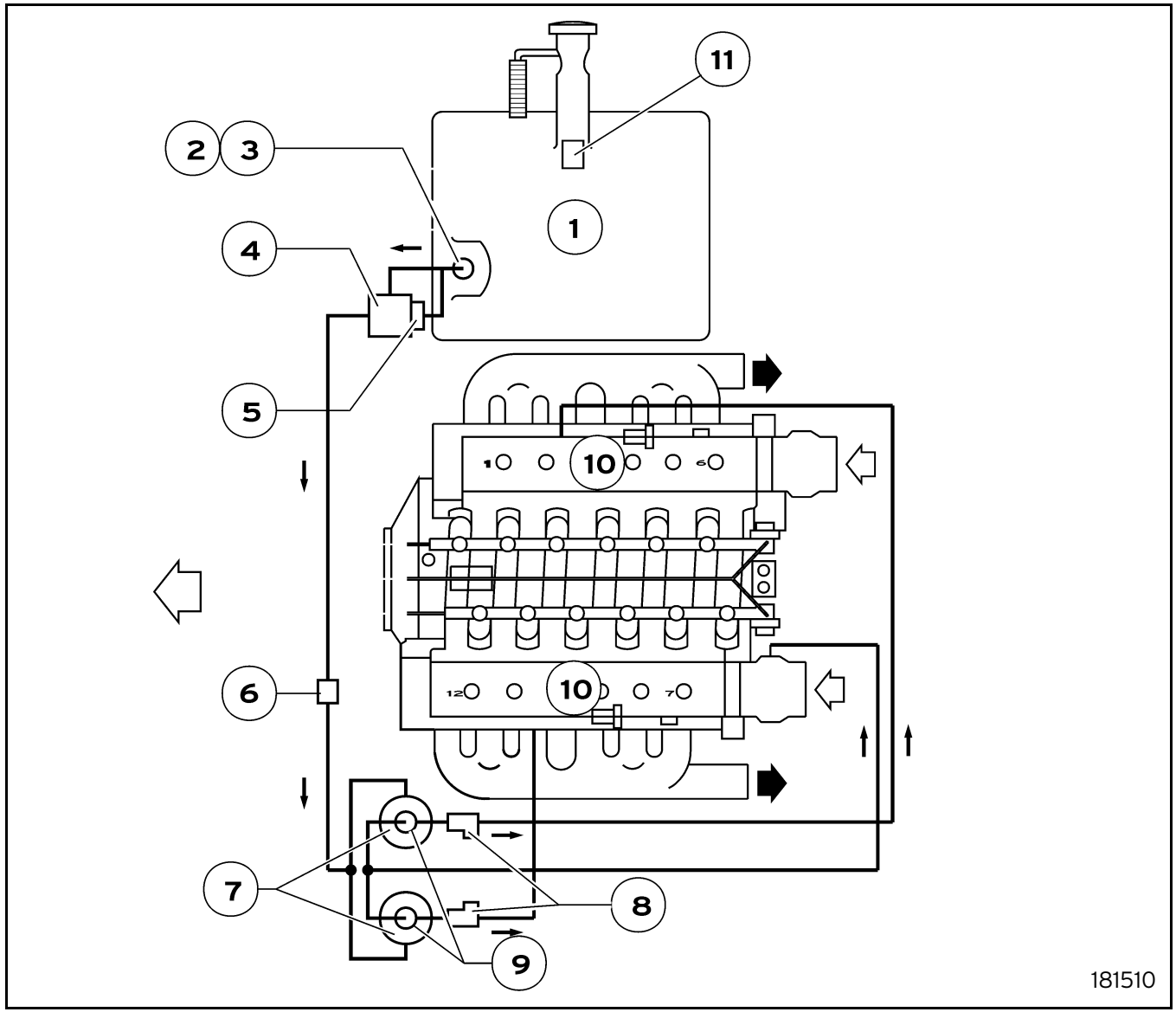


1 Fuel tank
2 Safety valve
3 Roll-over valve
4 Vapours separator
5 Pressure sensor
6 Pressure relief valve
7 Activated carbons filter
8 Solenoid valve
9 Activated carbon filter washing valve
10 Intake manifold
11 One-way valve

Fig. 30 - Fuel anti-evaporation system layout - EEC

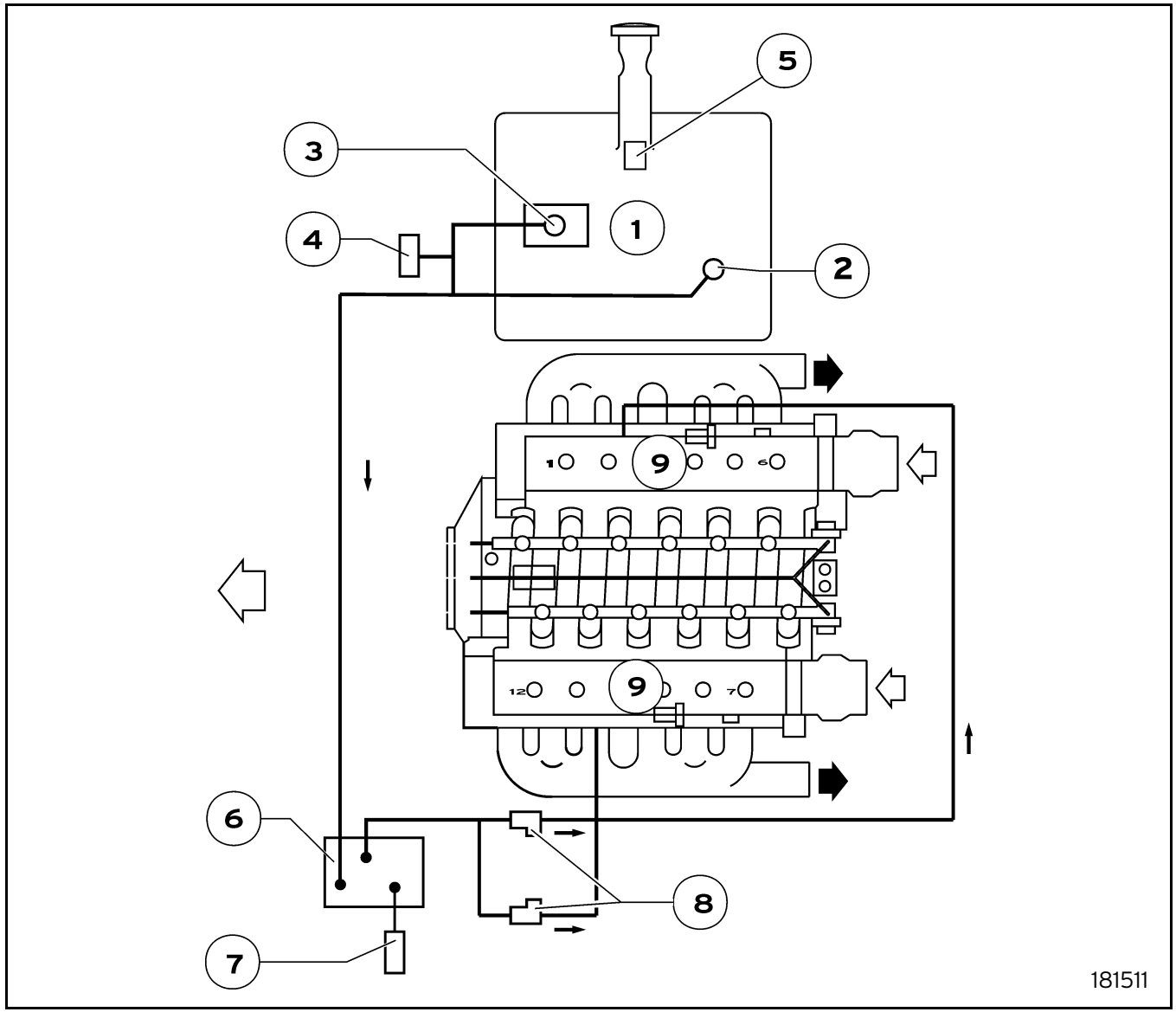


1 Fuel tank
2 Safety valve (floating valve)
3 Roll-over valve
4 Pressure sensor
5 One-way valve
6 Active carbon canister
7 Venting valve
8 Carbon canister washout valve
9 Intake manifold

Fig. 31 - Fuel anti-evaporation system layout - USA

## CHECKS AND ADJUSTMENTS

### General overview

When working on vehicles equipped with LIE engine control systems, the following rules must be observed:

- never start up the engine when the electrical connection terminals are badly connected or loose on the battery terminals;
- do not use a fast battery charger to start the engine;
- never disconnect the battery from the electrical system when the engine is running;

⚠ To have a fast battery charge, first disconnect it from the electrical system.

- if the vehicle goes into a drying oven at a temperature over 80°C after painting, the system control unit must be disassembled and removed from the vehicle;
- do not connect/disconnect the control unit multiple connector with the ignition switch in "ON" position;
- always disconnect the battery negative terminal before doing any electric welding on the vehicle;
- disconnect all the electronic control units and in particular the LIE and GFA control units.

⚠ The LIE engine control system (except for the Arabia version) is self-adaptive, and therefore no adjustment of the mixture strength at idle is required.

### Basic adjustment of idle speed

⚠
- These operations are to be carried out each time a component of the engine control system is disconnected or replaced.
- Pay the utmost attention to exhaust system components while checking and adjusting the engine idle speed and checking the combustion values because the parts may be very hot.

- Check that the accelerator control has a little play, that the two throttles close at the same time and at no electrical utilities are on (lights, climate control system, etc.).
- Connect the LDAS diagnostic interface to the vehicle.
- Start the engine and warm it up until the radiator fans are switched on (the fans should start up at least three times if the outside temperature is lower than 20°C).

- Make sure that the CARTER motor has ended its working cycle.
- Fully close the two by-pass valves and check that the engine speed does not drop under 800-900 rpm.
- Open the by-pass screws (fig. 32) to take the engine speed to 1150 ± 100 rpm. Read the absolute pressure on the F1-LDAS screen to balance the vacuum of the two blocks. The difference between the two hot blocks should be ± 20 mmHg.
- Use the LDAS to check that the throttle position sensor is within the specified value:

**TPS: 1.4 ± 0.2 %**

- Start <F6> Throttle Settings session.
- Make sure that the CARTER MOTOR has ended its working cycle (CARTER value = 0.0 in the dialogue window).
- Make sure that the PA value in the dialogue window is included in the range between the minimum value "PALo = MIN" and the maximum value "PAHi = MAX".
- If the PA value is out of range, adjust the position of the sensor on the throttle casing by loosening the screws that fasten it to the bracket and turn it as required.
- Stop the engine, leave the ignition switch at ON and check that the TPS value in the LDAS dialogue window <F1> or <F6> is within the specified values:

**accelerator at maximum TPS MAX 85 ± 0.2%**
**accelerator released TPS MIN 1.4 ± 0.2%**

**Idle speed adjustment**

⚠ Carry out the following operations whenever normal idle speed adjustment is required.

- Check that the accelerator control has a little play, that the two throttles close at the same time and at no electrical utilities are on (lights, climate control system, etc.).
- Connect the LDAS diagnostic interface to the vehicle.
- Start the engine and warm it up until the radiator fans are switched on (the fans should start up at least three times if the outside temperature is lower than 20°C).
- Make sure that the CARTER motor has ended its working cycle.
- Open the by-pass screws (fig. 31) to take the engine speed to 1150 ± 100 rpm. Read the absolute pressure on the F1-LDAS screen to balance the vacuum of the two blocks. The difference between the two hot blocks should be ± 20 mmHg.
- Use the LDAS to check that the throttle position sensor is within the specified value:

**TPS: 1.4 ± 0.2 %**

**CO and HC contents check**

Proceed as follows to check the CO and HC contents:

- Stop the engine and start it again.
- Turn the engine for at least two minutes at 1800/2000 rpm.
- Check that the coolant and air temperature of the two blocks is at least 73°C and 30°C respectively.
- Make sure that the coolant fans are on (the fans should start up at least three times if the outside temperature is lower than 20°C) and that the climate control system compressor is off (select maximum temperature).
- Let the engine idle for at least four minutes. The KJLAMBDA value should hover around 1 (0.96/1.04) and then stop at 1.
- Sample exhaust gas from the specific vents (fig. 32). Check that the CO and HC contents are respectively:

**CO < 1.0%**

**HC < 500 ppm**

- The CO content at the tailpipes, on the other hand, should be included in the range from 0.0 to 0.2%. This procedure is used to check whether the catalytic converters are working but cannot demonstrate the complete efficiency of the devices.

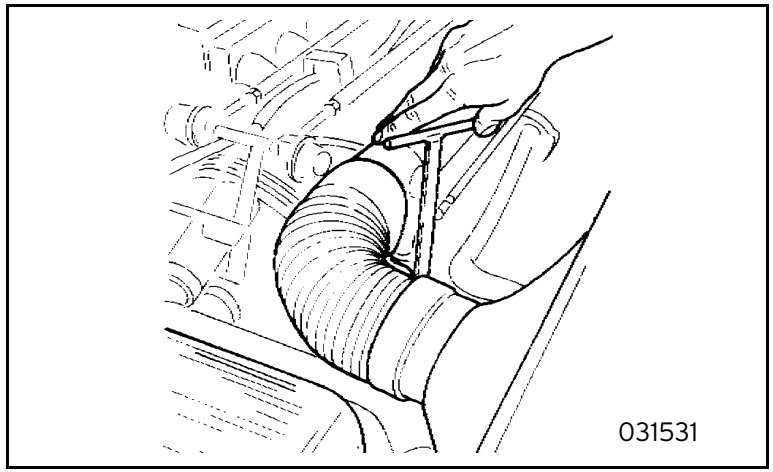


Fig. 32 - Engine idling speed adjustment

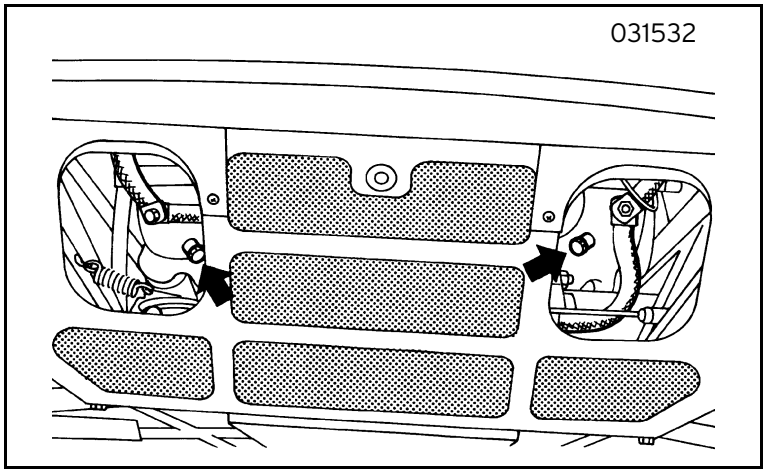


Fig. 33 - Taking a sample of exhaust gas upstream of the catalyst

- Slightly open the accelerator and make sure that the KJLAMBDA factor returns to hover around 1.
- Check that the engine speed is still 1150 ± 100 rpm. Adjust, if required, by means of the by-pass screws and check vacuum in the two blocks.
- Stop the engine and seal the throttle potentiometer stop screws and the by-pass screws with paint. Furthermore, check conditions of the throttle stop screw sealing caps.

⚠ Pay the utmost attention to exhaust system components while checking and adjusting the engine idle speed and checking the CO and HC contents because the parts may be very hot.

**Idle mixture strength (Arabia version)**

- The self-learning function is not implemented in Arabia version because lambda sensors are not fitted.
- The F1-ARABIA screen will be automatically started when the ECU type is recognised.

Proceed as follows to adjust the mixture strength:

- Warm up the engine and check that the coolant and air temperature of the two blocks is at least 73°C and 30°C respectively.
- Make sure that the coolant fans are on (the fans should start up at least three times if the outside temperature is lower than 20°C) and that the climate control system compressor is off (select maximum temperature).
- Start up the LDAS and display parameter OTJTRIM on screen F1.
- Sample exhaust gas from the specific vents. Check that the CO and HC contents are respectively:

  **1.0 < CO < 1.5%**

  **HC < 500 ppm**
- If this is not so, adjust the OTJTRIM value to reach the required CO level. Also adjust the idle speed as described above, if required.

The OTJTRIM value should be in the range from -0.75 and +0.75. The system will signal the error by lighting up the diagnostic warning light if these thresholds are exceeded.

**Fuel circuit checks**

Pressure regulator check.

To check the operation of the pressure regulator proceed as follows:

- Connect a precision gauge to the system, inserting it between the injector holder manifold and the delivery coupling;
- Start up the engine and warm it until the radiator fans start running;
- Check that the engine revolution speed is 1150 ± 100 rpm, if it is not, make adjustment as previously described;
- Check that pressure p is within the prescribed values:

**2.5 < p < 2.8 bar**

Fuel pump flow rate check

Check the fuel circuit flow rate q is within the prescribed values:

**1.5 < q < 1.7 litres/minute**

Fuel system seal check

After the efficiency of the pressure regulator has been verified, check that the pressure in the system does not drop below 1 bar for at least one hour.

## SELF-DIAGNOSTICS SYSTEM

**General overview**

The LIE engine control units are able to acknowledge and memorise any failures relating to the system sensors that could be generated also by mechanical faults. If this situation occurs the CHECK ENGINE warning light of the cylinder bank where the problem has arisen lights up and at the same time the fault is memorised in the special memory of the relevant engine control unit.

The CHECK ENGINE warning lights switch on for about ten seconds whenever the ignition key is turned to MARCIA to test its correct operation.

If the failure is temporary, the CHECK ENGINE warning light switches off 2 minutes after the problem has disappeared. The error code is however memorised by the engine control unit.

If errors have been stored in the two engine control units, these will be seen simultaneously through the relevant CHECK ENGINE warning lights.
The engine control units can store more than one error at a time; in such cases they are indicated in succession.

Use the LDAS equipment to find the fault in the case of a failure. Do not use the CHECK ENGINE warning light flash codes.

To have diagnosis performed by the Manufacturer when there is a fault, it is essential to send the LIE control units and the GFA control unit since the two LIE control units are connected to the GFA control unit that co-ordinates and manages several functions, especially concerning diagnostics.

**OBDII self diagnostics system**

Introduction

OBD signifies On Board Diagnostic and refers to the bad functioning and diagnosis indication system required by the California Air Resource Board (CARB) and now also by the Environment Protection Agency (EPA) for all cars, light transport trucks, medium transport trucks and vans sold in the USA. OBD II indicates the second generation of this standard.
This regulation started in 1988 when it was found that very often the vehicles on the road, although having passed very severe new tests, exceeded the allowed emission limits due to emission control system failures.
To begin with, OBD I required the monitoring of all input sensors to the computer controlling components concerning emissions to check the continuity, short circuit and parameter range (voltage, frequency, signal shape etc.)
The current OBD II is substantially an improvement of the previous standard. The exact requirements are well summed up in section (a) – 1.0 of the OBD II standard.

> "As from 1994 all cars, light transport trucks and medium transport trucks are to be fitted with a failure warning light (MIL) on the instrument panel, that automatically informs the vehicle driver of a fault on any component that could have influence on the emissions and that sends or receives signals from the computer on board. The warning light is not to be used for any other purpose".

In fact, the standard does not only require that the sensor fault is identified, but that it also identifies components or systems that are not operating properly or that are so old that they cause an increase in emissions that exceeds the set limits. In particular it also requires the monitoring of the catalyst efficiency, misfiring, efficiency of anti-evaporation system etc.
To satisfy this severe standard an enormous technological effort is required of the Manufacturers. In some cases the OBD II requirements stretch the limits of current technologies, especially concerning the misfire indication.
The manufacturer, besides developing a system that satisfies the standard must also ensure that the system operates well under any type of operating conditions. Therefore, to avoid the incorrect indication of malfunctioning extremely accurate engineering is necessary together with careful testing.
Lamborghini has been the first manufacturer of low volume sports cars to obtain the OBD II and CARB approval starting from the MY96.

OBD II functions

- Misfiring monitoring

A low percentage of misfiring (lack of fuel) can considerably increase emissions. A greater percentage of misfiring (for example, due to a loose spark plug or injector) can cause also serious damage to the catalyst.
OBD II requires monitoring of any type of misfiring that could cause greater emissions than the fixed limits and also requires the detection of the individual cylinder that does not fire.

- Anti-evaporation system monitoring

The evaporation system is used to impede the fuel vapours coming out from the supply system.
The standards require monitoring of the evaporation system efficiency and the detection of any loss of hydrocarbon vapours from the fuel supply system or the evaporation circuit.
The LIE system conforms to this requirement using software strategies based on signals coming from the fuel vapours pressure sensor.
The system can monitor malfunctioning over all the anti-evaporation system .

- Fuel supply system monitoring

OBD II requires monitoring of the fuel supply timing system so as to issue an amendment to the emission standard.
The LIE system conforms to this requirement using software strategies based on the monitoring of the operation of the components involved in the fuel timing system (oxygen sensors, absolute pressure sensors, throttle sensors etc.)

- Oxygen sensor monitoring

OBD II requires the monitoring of the correct operation of all the oxygen sensors (lambda).
The LIE system checks, as required, the correct operation of the oxygen sensors, including their heating circuits.

- Monitoring of components that interact with the emission control

The diagnostic system must also check for any failure on any component of the system that sends or receives commands from the on board computer and that could influence emissions.
The LIE system conforms to this requirement by means of functional checks on all electronic components and sensors that interact with the emission control.

## SYSTEM DIAGNOSTICS

**Preliminary checks**
Some rules to be followed when using diagnostics on the engine control system for the elimination of a fault are given below:

- always check that there is fuel in the system;
- make sure that the engine earth connection is in good condition;
- check the condition of the LIE system protection fuses;
- check that the component electrical connections are inserted properly;
- never disconnect the terminals from the battery with the engine running;
- check there are no leaks or seepage from the water, air, fuel, oil, exhaust systems;
- when servicing the injection system always make sure that the working area is kept clean;
- check the perfect condition of the ignition system, coils, spark plugs etc. Misfiring can cause serious damage to exhaust system components especially due to unburnt fuel that would be sent to the catalytic converter;
- never use batteries that have a voltage different from that used in the car; if connecting auxiliary batteries check correct connection with that on board;
- never use fast recharging systems to start up the car;
- check the condition and cleanliness of the vacuum ducts on the engine: pressure sensor connection, pressure regulator connection, activated carbon filter solenoid valve connection etc.

The engine control system diagnosis can be carried out using LDAS.

**OBDII scan tool**

OBD prescribes that after the warning light switches on due to a fault, the engine control unit must record a specific error code.
The purpose of OBD II is to warn the driver of a fault, but also to give precise information to the technicians concerning the fault detected by sending a standard diagnostic protocol.
The co-operation between SAE (Society of Automotive Engineering), CARB and EPA has made it possible to define a series of standards for hardware communications (connections) and software communications (protocols) relating to the diagnostic systems.
The following standards have been defined:

- all vehicles are to be fitted with a standard diagnostic connector (SAE J1962) to be located in a defined position for the dialogue with the diagnostics instrument:
- standard communication interfaces have been defined (SAE J1850 and ISO 9141-2);
- a generic and standardised OBD II SCAN TOOL can be used to obtain a series of basic diagnostic procedures. The term OBD II SCAN TOOL refers to any object (hand-held scan tool, computer etc.) that satisfies the SAE J1978 and SAE J1979 standards;
- a standard list has been prepared of the diagnosis codes (SAE J2012).

In this way the dealer's technical staff, but also unskilled operators, can make a diagnosis of the emissions control system.

**LDAS**
**(Lamborghini Data Acquisition System)**

For the Lamborghini Authorised Dealerships, Lamborghini has adopted a more powerful communication software, closer to the user, based on a patented system called LDAS (Lamborghini Data Acquisition System).
The system diagnosis takes place using the LDAS system that, interfaced with the control units through the CAN line, makes it possible to read the various error codes, as well as a series of operations that are described further on.
With this system the information and error codes are available that are required by OBD II and more precise information is also obtained concerning the engine life and working condition when making the diagnosis.

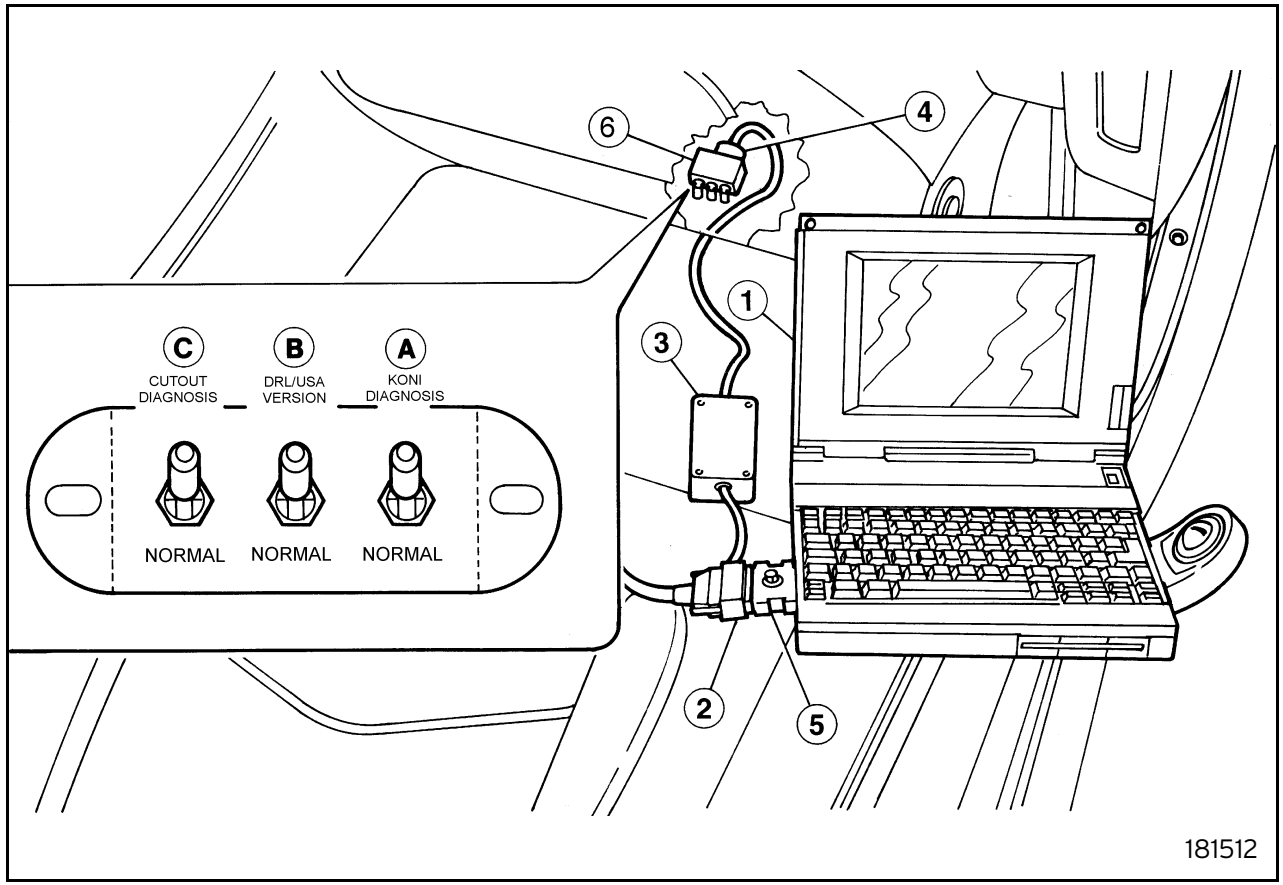


1 Computer
2 Parallel output connection
3 Interface
4 CAN line connection
5 Hardware key
6 Vehicle on-board interface

Fig. 34 - LDAS diagnostic connection

⚠ Do not touch the switches on the front of the vehicle on-board interface. For your information, the function of the buttons are:

A Shock absorber diagnostic enable switch
B DRL device (lights on at start-up) off switch
C Utility off switch

## Introduction

LDAS is a tool based on a CAN line interface between a Personal Computer and the car control units to monitor engine condition parameters, developed to supply all the useful information for tuning and diagnostics (including OBDII) of the engine.
In particular it is possible to have access to all the information currently available from the Lamborghini console, plus the OBDII error codes, as well as data acquired through the new "BLACK BOX" function.
This new function memorises during the entire engine life, a series of parameters that are deemed of considerable interest to assess what happened during the engine use.

Therefore, through LDAS it is possible:
- to view any memorised error messages, in accordance with OBDII specifications, without having to use the scan tool;
- to view the engine condition in real time and thus make any adjustments needed;
- download the data stored by the ECU, acquired during engine operation and save it in a file.

## System configuration

The system basically consists of:
- LDAS SOFTWARE: to be installed in a Personal Computer;
- HARDWARE KEY: to connect to computer parallel port;
- PC-CAN INTERFACE: connecting interface between computer (parallel port) and CAN line in the car.

System setup

The steps required to set up LDAS software on PC are shown below.

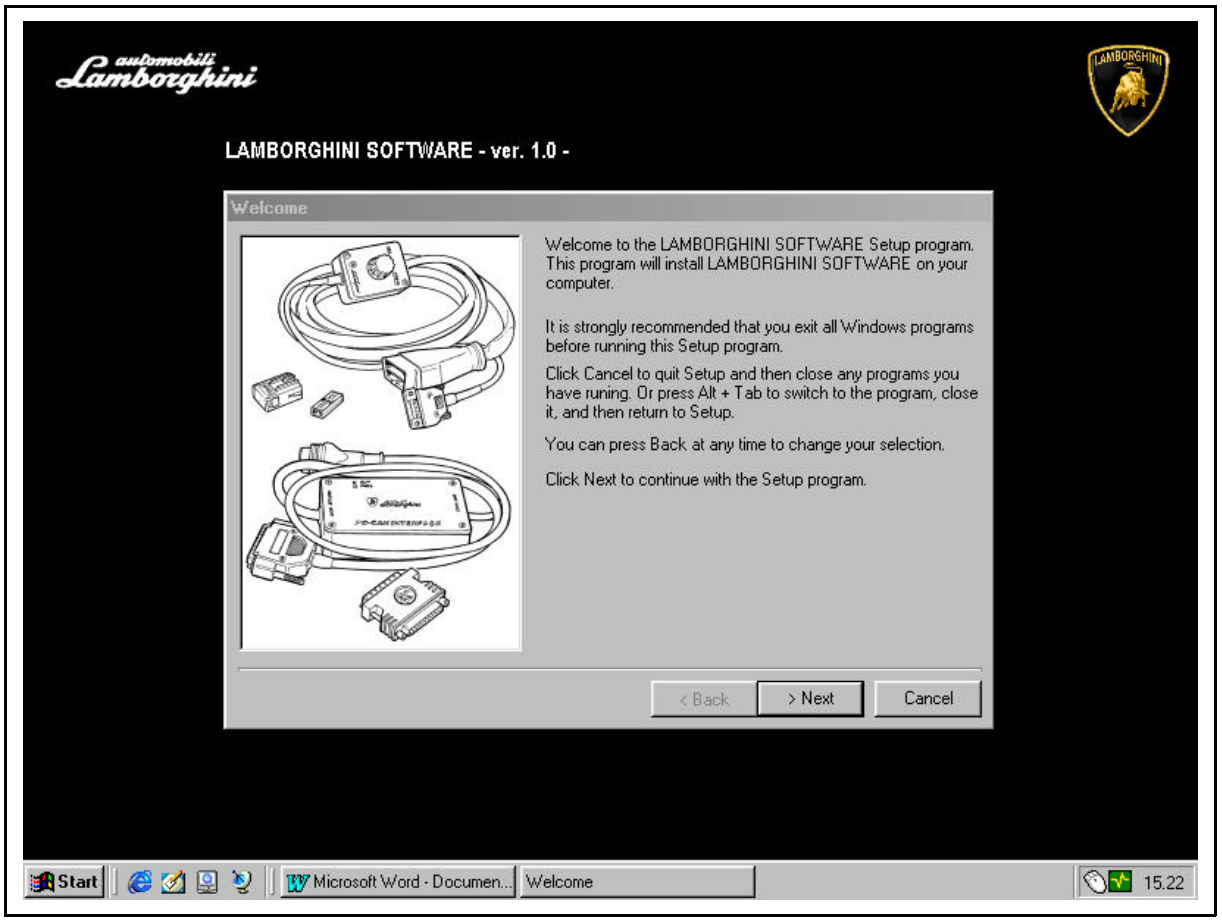


Close all Windows applications and press Next.

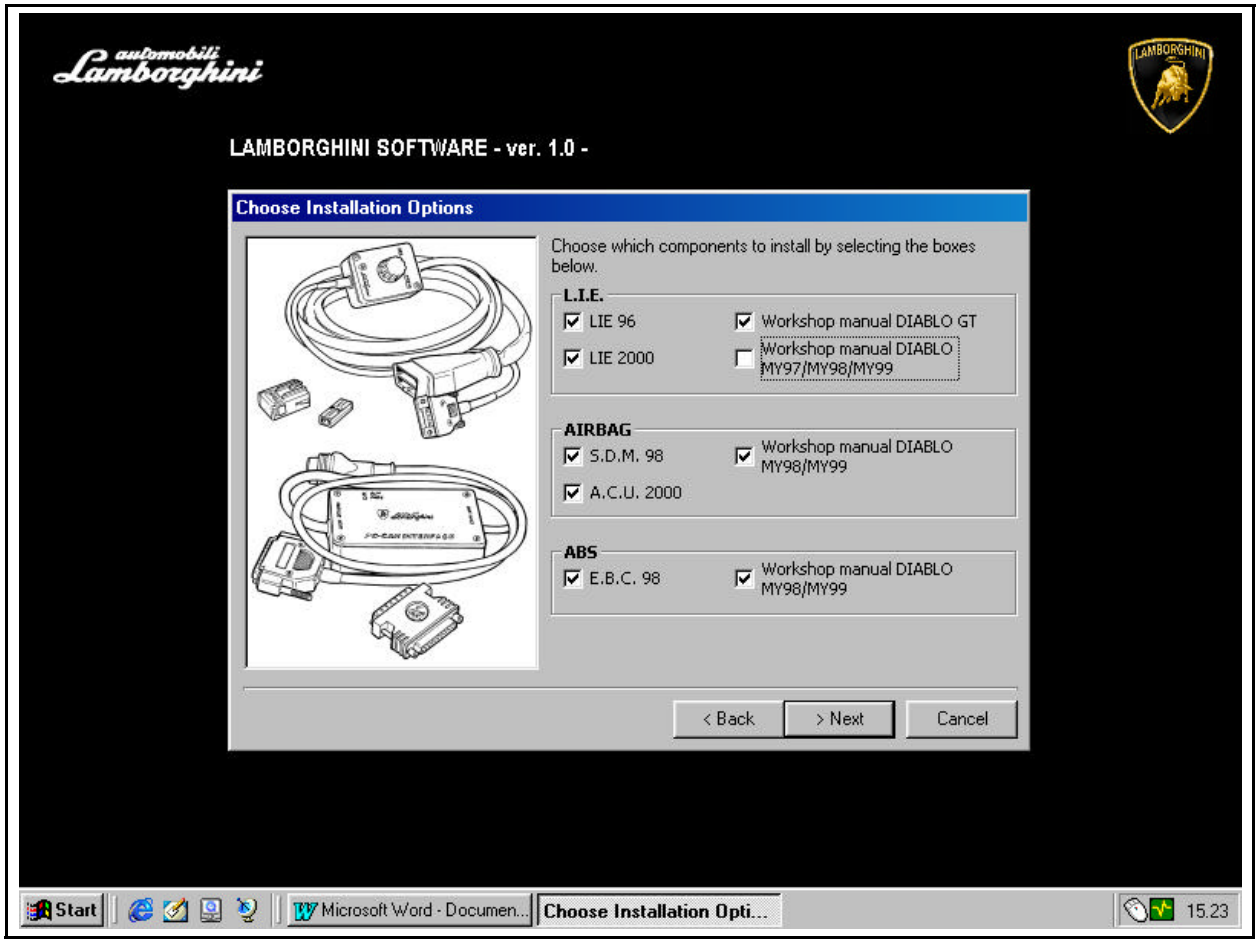


Select the applications you want to install:

- LIE engine control ECU
- Airbag ECU
- ABS ECU.

Select the vehicle MY and press Next.

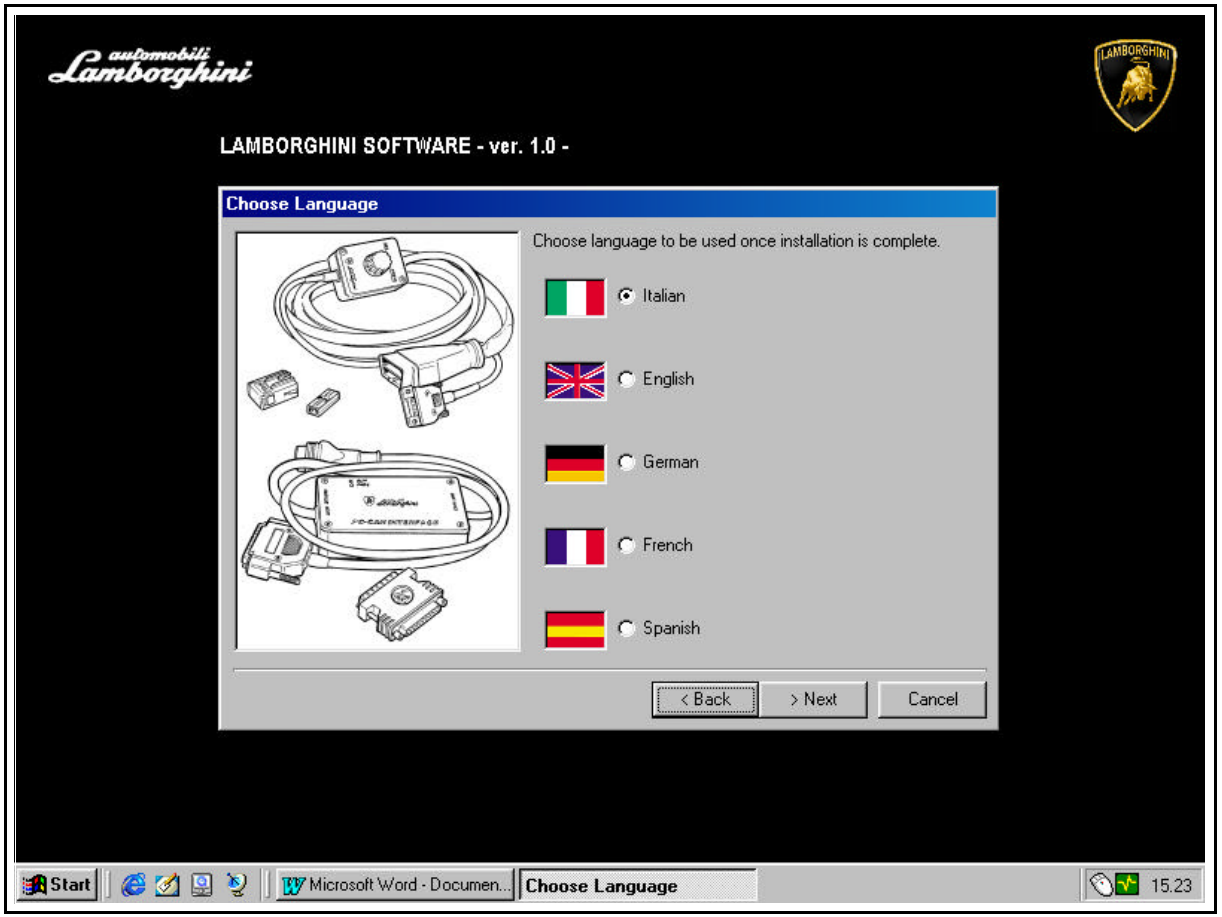


Select the language and press Next.

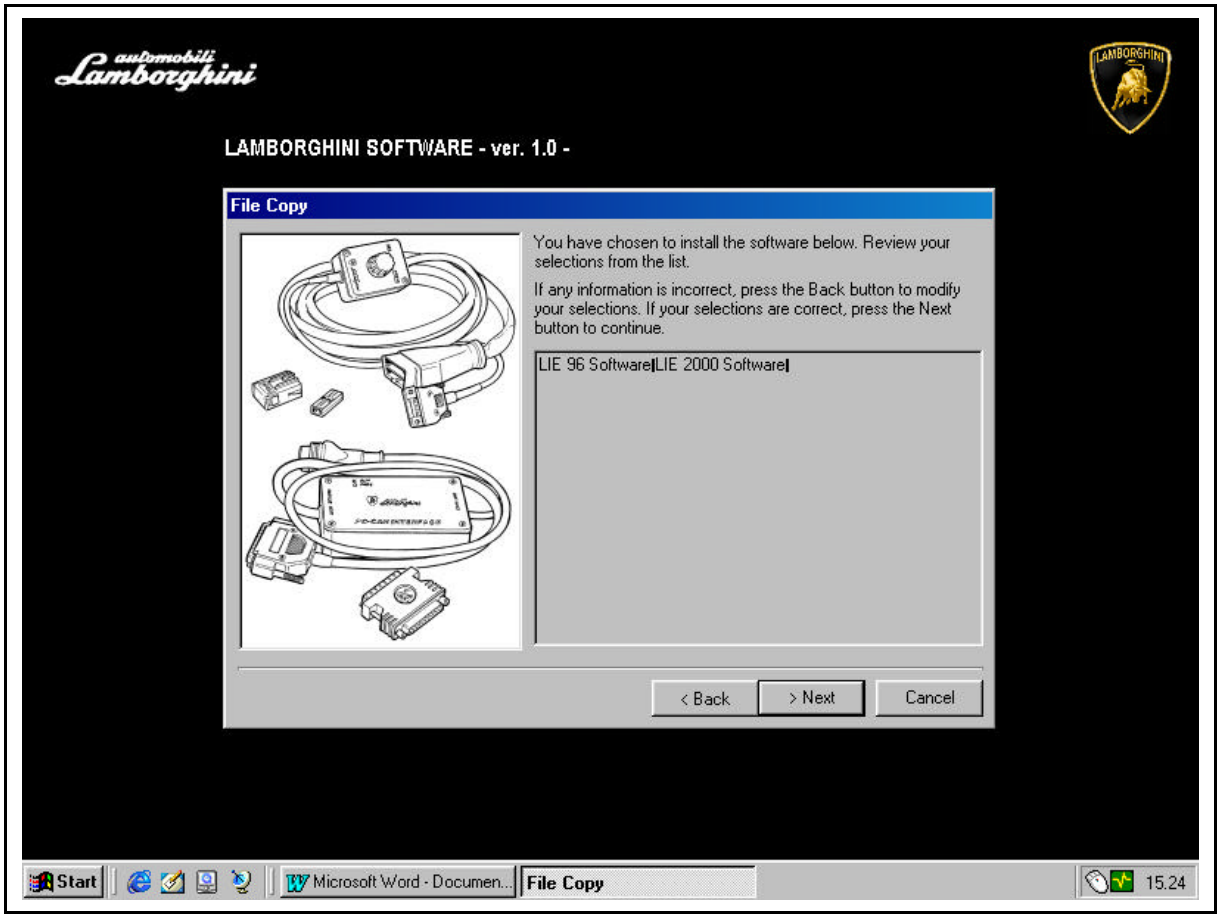


Select Next is the information is correct. Otherwise, press Back to return to the previous pages.

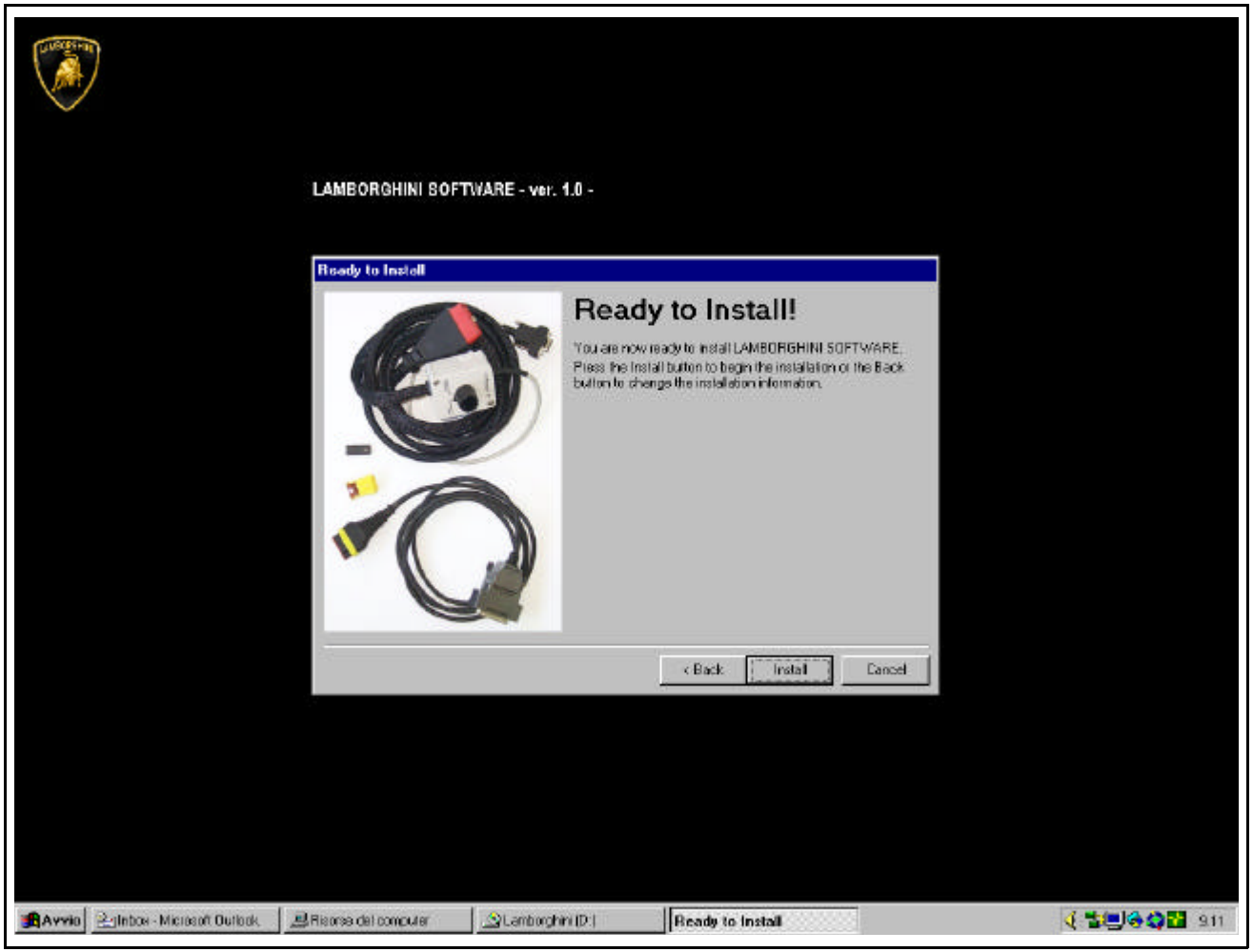


Press Install if the information is correct.

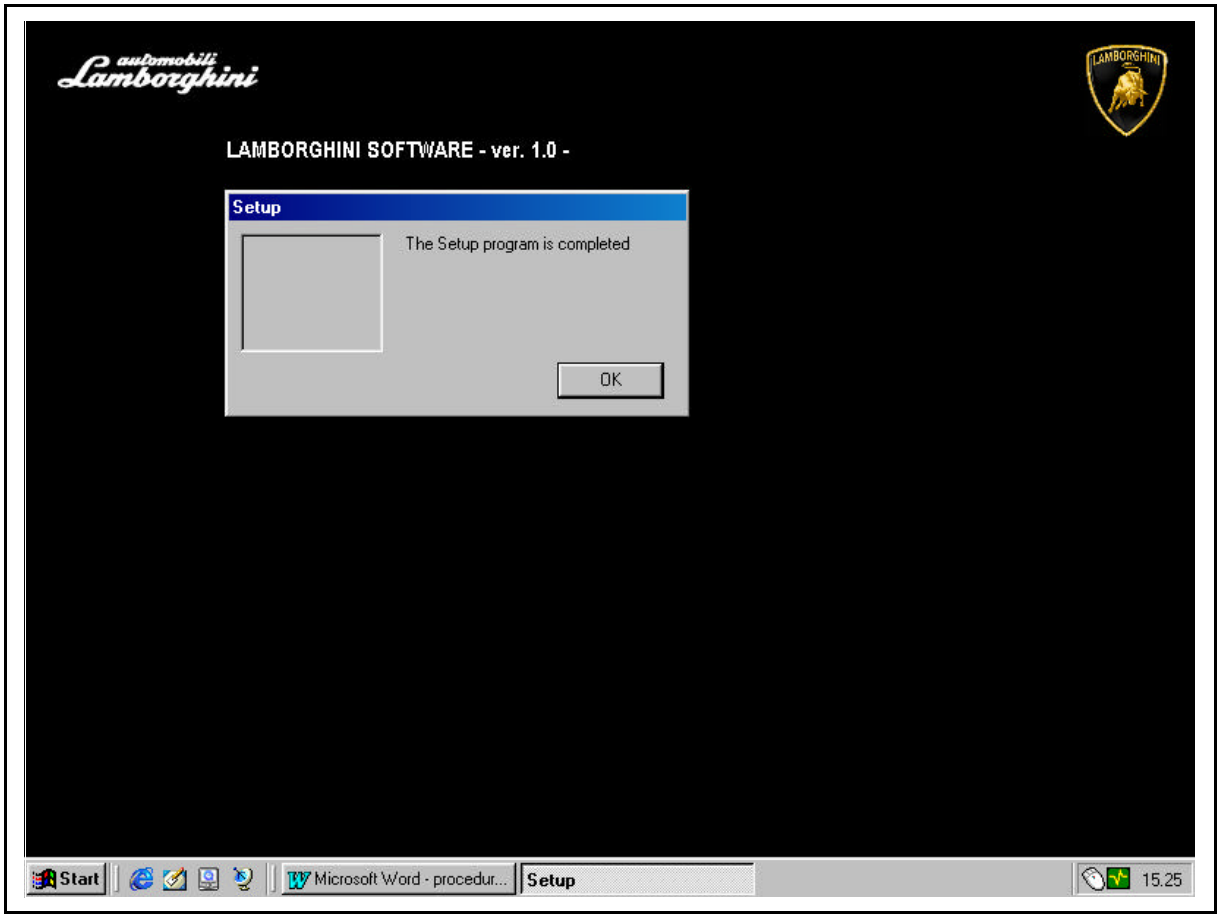


Press OK at the end of the setup.

⚠ A specific setup procedure is required for the AIRBAG MY 00/01 diagnostic program.

Using the system

Instructions for using the LDAS system for LIE engine control system diagnostics are given below.

1 - START

- switch on the computer
- connect the PC-CAN INTERFACE to the computer parallel port without removing the hardware key
- in the car position the key on OFF
- connect the PC-CAN INTERFACE to the CAN connector in the car after removing the protection cap so as to have CAN line communication.
- Turn the key to ON. Start the engine if required.

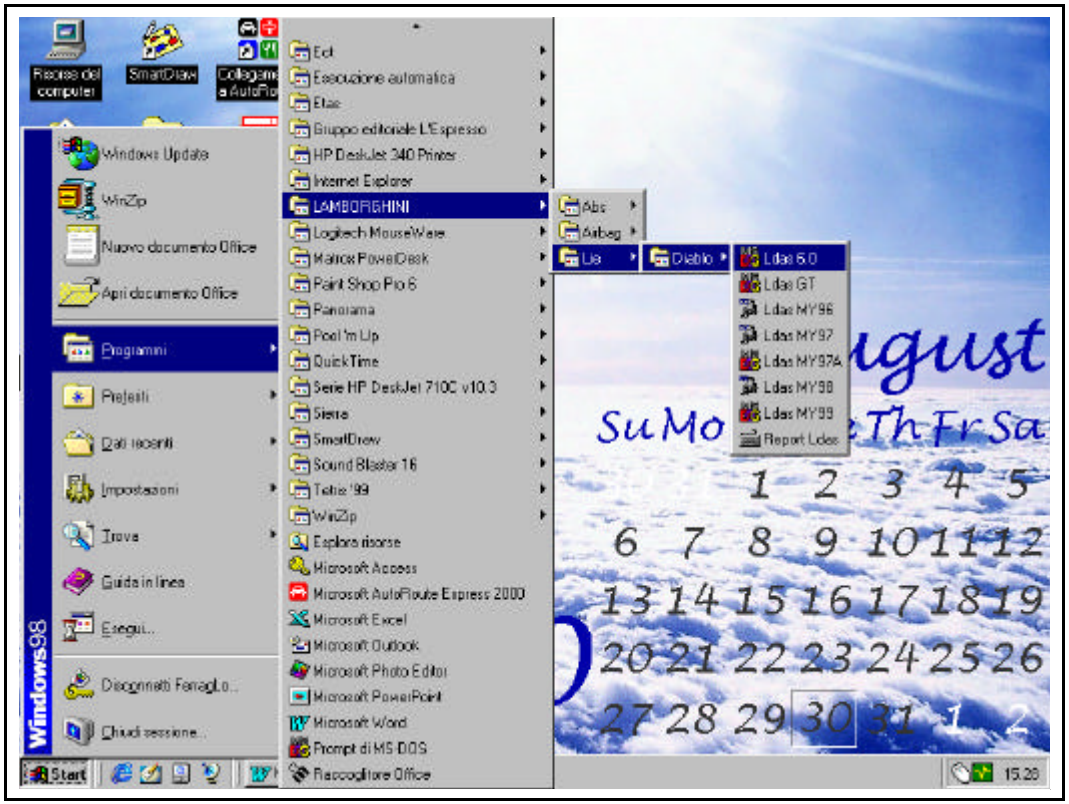

- Select the function from the menu with the mouse and press Return to confirm.

The figure is only an example.

FILE
2.1 - Load Binary
Loads into memory a Binary data file generated by the command indicated in point 2.2; this can be analysed later.
2.2 - Save Binary
Writes the data acquired by the ECU in a binary file (.LIE). It can only be run with LDAS software.
2.3 - Save Ascii
Writes the data acquired by the ECU or downloaded into memory from a binary file in an ASCII file (.ACQ).
2.4 - Dos Shell <F9>
Passes momentarily to DOS environment.
To return to LDAS type Exit.
2.5 – Exit <Ctrl-X>
Final exit from the program.

ENGINE (ONLY ACTIVE IF CONNECTED TO THE CAR)
3.1 - Run Time Data <F1>
Displays the engine parameters of ECU 1/6 and 7/12 in real time.
This page is only activated when the CAN line is connected and the ignition key is in ON position.

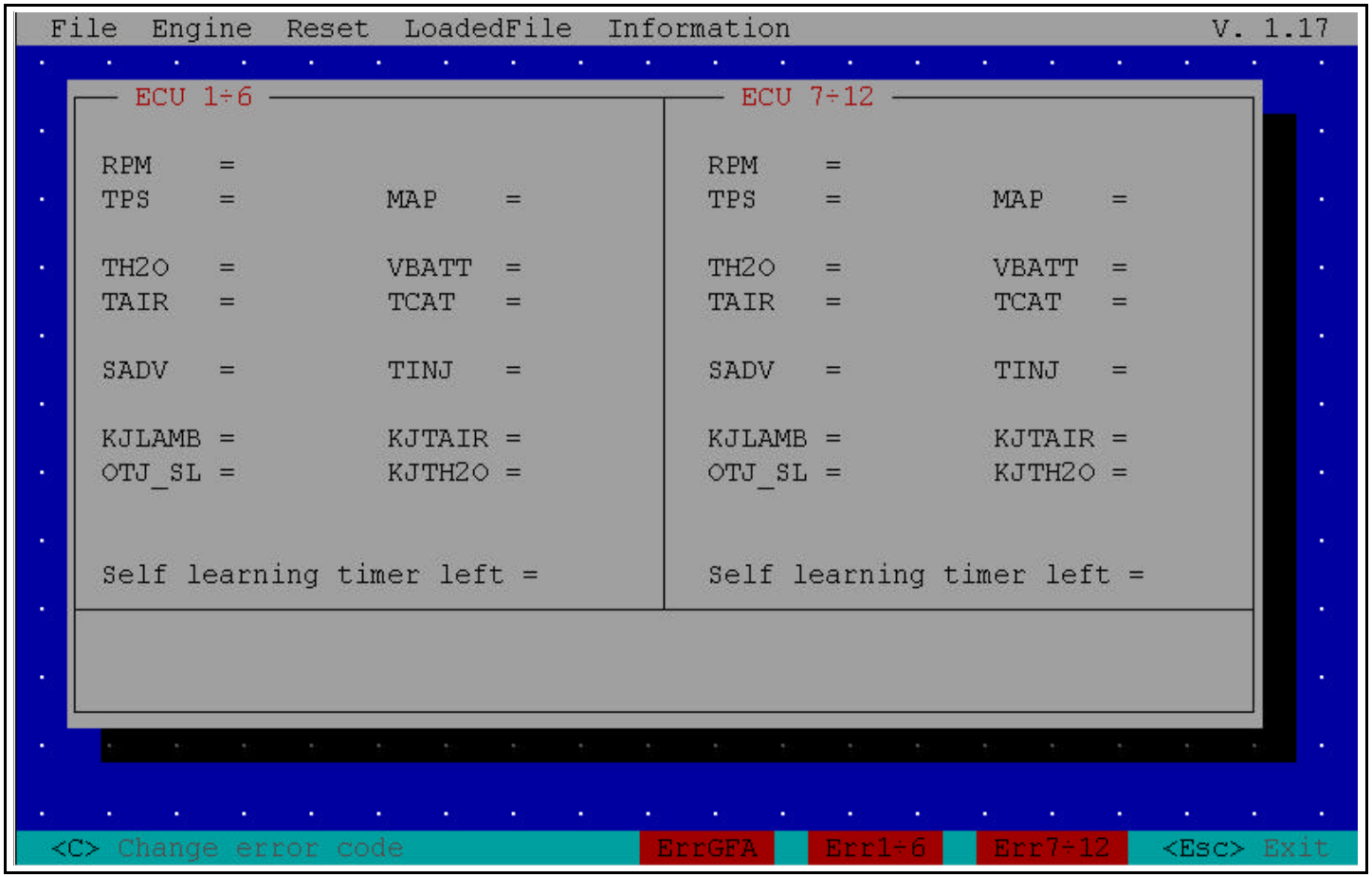


Engine parameter table (Arabia versions excluded)

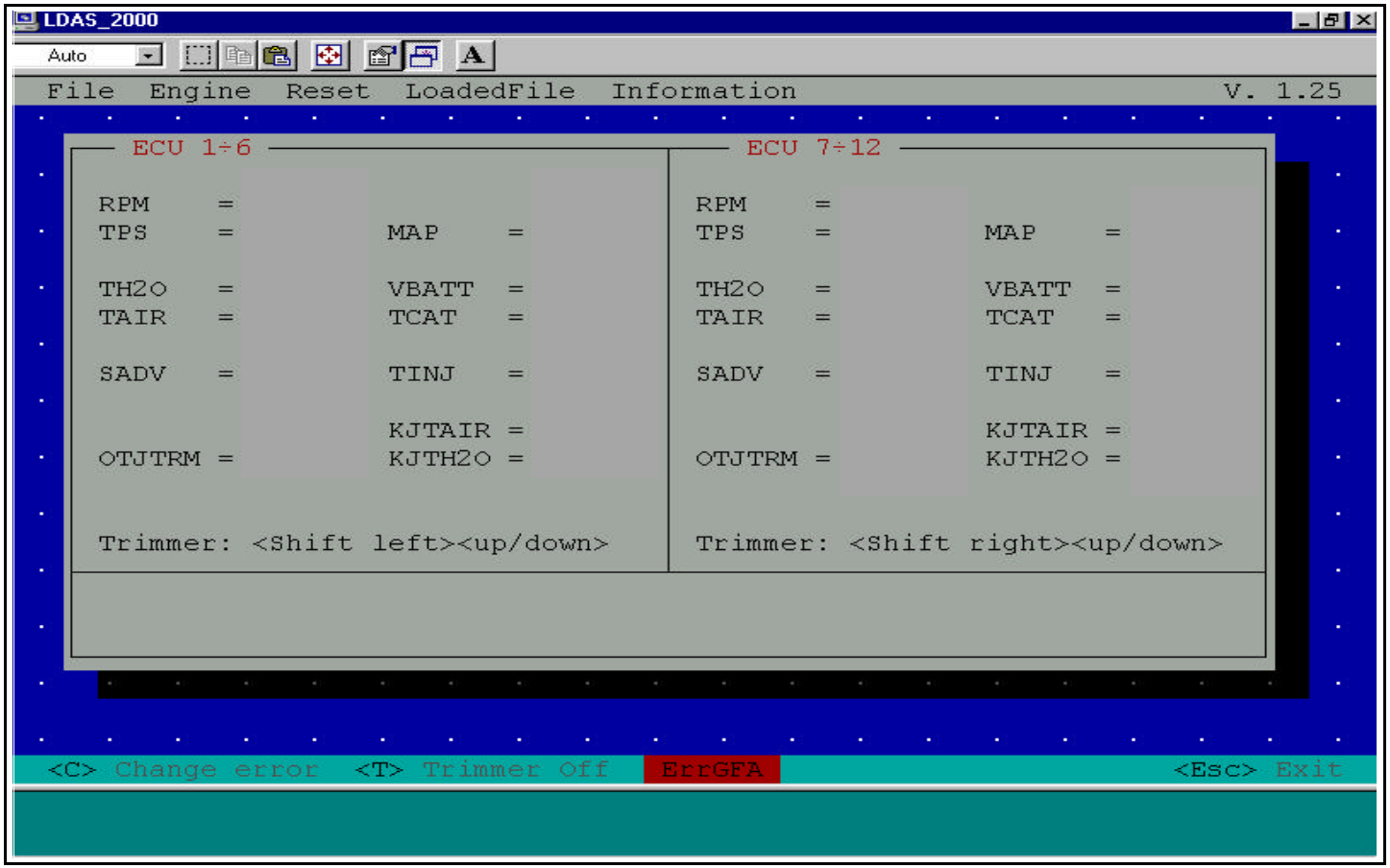


Engine parameter table (Arabia versions only)

**List of displays.**

RPM: engine rotation speed; the values displayed may range between "MIN____" and "MAX____" rpm.

TPS: throttle opening angle; the values displayed must range between "MIN 1.4 ± 0.2% " and "MAX 73 ± 0.2 %"

MAP: absolute air pressure in the intake duct downstream of the throttle case “mmHg”;

TH2O: coolant temperature “°C”;

VBATT: battery voltage “Volt”;

TAIR: intake air temperature “°C”;

TCAT: temperature found upstream of catalyst “°C”;

SADV: spark advance “∠°”;

TINJ: injection time “ms”;

KJLAMB (Arabia versions excluded): injection time correction factor according to the signal coming from the lambda sensor;

KJTAIR: injection time correction factor according to the intake air temperature;

OTJ_SL (Arabia versions excluded): injection time correction factor generated by the self-learning strategy;

OTJTRIM (Arabia versions only): injection time correction factor to adjust idle mixture strength.

KJTH2O: injection time correction factor of coolant;

SELF LEARNING TIMER LEFT: display of time remaining to finish self learning;

ERROR CODE: Displays the error messages stored by the control units.
To scroll the error messages sequence, press C.

To exit press Esc.

3.2 - Table of Usage <F2>
Displays the engine functioning time table according to the throttle opening (TPS) and the speed (RPM), indicated as percentage of the total functioning time (intended as the time the engine has been running) shown in the top right corner "Total Time:"
Positioning the cursor in any area of the table, the corresponding absolute value "Selected time:" can be seen on the bottom left.
To change the displayed block, press C.
To exit press Esc.

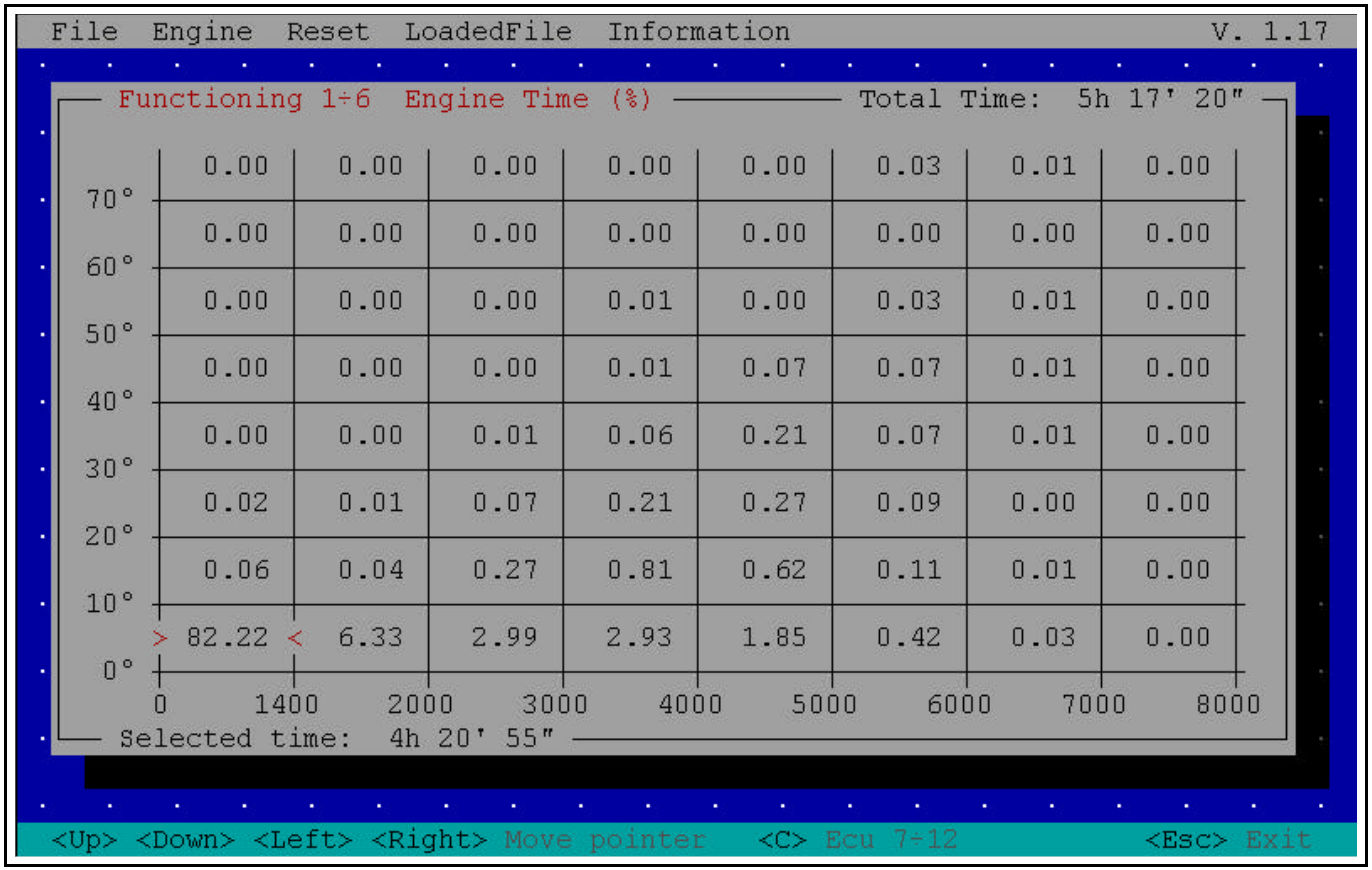


Engine functioning time table under different throttle and rpm conditions
In the example, it can be seen how the engine has run for l'82.2% (equal to 4h 20' 55", selected time) of the total time (equal to 5h 17' 20", total time) under conditions ranging from 0° to 10° throttle and 0 to 1400 giri/min.

3.3 – Warning Threshold <F3>

Displays the table indicating the passing of the critical thresholds of certain "Condition" parameters that are considered fundamental to find the type of engine usage: engine rpm, high and low battery voltage, high engine cooling temperature, high exhaust gas temperature.

For each of these the set "Threshold" value is indicated, as well as the "Mask time" and the "Number of warnings".

"ECU Time" is the time in which the ignition switch has remained in ON position ( LIE powered).

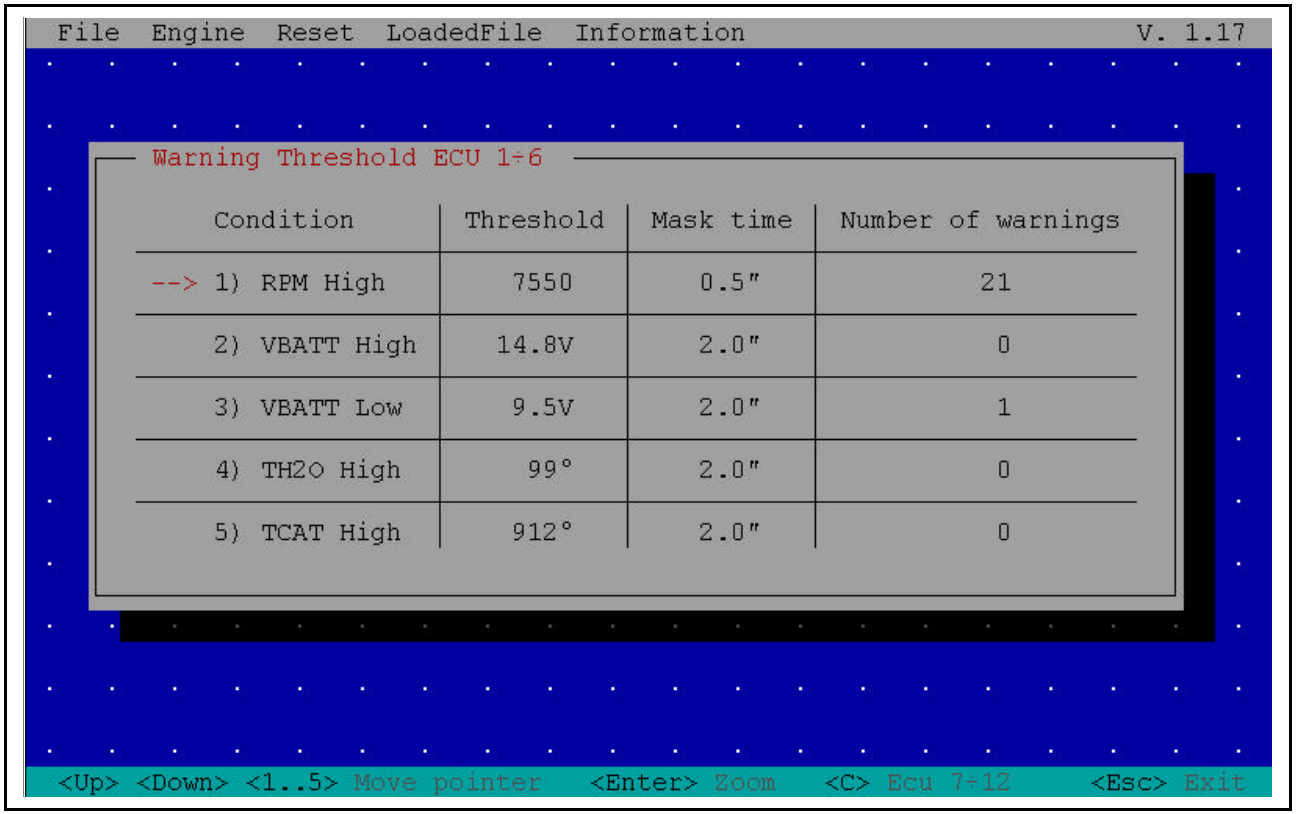


| Condition | Threshold | Mask time | Number of warnings |
|---|---|---|---|
| --> 1) RPM High | 7550 | 0.5" | 21 |
| 2) VBATT High | 14.8V | 2.0" | 0 |
| 3) VBATT Low | 9.5V | 2.0" | 1 |
| 4) TH2O High | 99° | 2.0" | 0 |
| 5) TCAT High | 912° | 2.0" | 0 |

Critical threshold exceeding

Use the cursor to select the condition for which you want to know more details (for example “RPM High”). Press < Enter > to have access to the next window that shows this information for each warning (up to a maximum of 16 plus the last two that took place “Last“ and 2.Last”),: maximum peak “Max ... or Min ...“ reached, starting moment of surpassing, referring to the “Time” control unit life, engine speed at beginning of RPM reading, absolute pressure in intake manifold “MAP”, engine coolant temperature “TH2O” at moment of exceeding the threshold and “Duration”.
Event #= register of event N°.
NOTE. The recorded data from 1 to 16 is listed in order of time (in the first 16 LIE readings) and seriousness (readings made after the 16th that replace in order of seriousness the first 16 found).
To change the block displayed, press <Esc> then < C >.

To exit press < Esc > twice

File Engine Reset LoadedFile Information V. 1.17

RPM High 1÷6 — Ecu Time: 4h 1' 22"

| | Max RPM | Time | RPM | MAP | TH2O | Duration | Event# |
|---|---|---|---|---|---|---|---|
| 1 | 7995 | 2h 46' | 7796 | 740 | 78° | 1" | 1 |
| 2 | 7957 | 2h 48' | 7936 | 728 | 84° | 1" | 2 |
| 3 | 7974 | 2h 49' | 7936 | 735 | 85° | 1" | 3 |
| 4 | 7974 | 3h 26' | 7974 | 734 | 80° | 1" | 17 |
| 5 | 7974 | 2h 52' | 7857 | 738 | 85° | 1" | 5 |
| 6 | 7957 | 2h 53' | 7759 | 740 | 85° | 1" | 6 |
| 7 | 7936 | 3h 46' | 7911 | 736 | 80° | 1" | 21 |
| 8 | 7995 | 2h 54' | 7664 | 734 | 84° | 2" | 8 |
| 9 | 7974 | 2h 59' | 7759 | 735 | 85° | 1" | 9 |
| 10 | 7957 | 3h 0' | 7836 | 742 | 80° | 1" | 10 |
| 11 | 7936 | 3h 30' | 7700 | 739 | 85° | 1" | 19 |
| 12 | 7974 | 3h 30' | 7936 | 730 | 85° | 1" | 18 |
| 13 | 7995 | 3h 19' | 7836 | 738 | 84° | 1" | 13 |
| 14 | 7974 | 3h 20' | 7700 | 742 | 84° | 2" | 14 |
| 15 | 7874 | 3h 23' | 7739 | 737 | 84° | 1" | 15 |
| 16 | 7812 | 3h 24' | 7664 | 746 | 82° | 1" | 16 |
| 2.Last | 7664 | 3h 32' | 7664 | 739 | 79° | 1" | 20 |
| Last | 7936 | 3h 46' | 7911 | 736 | 80° | 1" | 21 |

Display data frozen. <AnyKey> To continue

Example of engine speed critical threshold warning detail

3.4 – Starting Attempts <F4>
Displays the table showing the number of failed starts referring to the total starts made at different H2O temperatures.

3.5 – Error Code <F5>
Displays error messages stored by the control units.

⚠ The error code tables are given on the next pages.

To scroll the message sequence, press C.
To exit press Esc.

3.6 - Throttle settings <F6>
Displays the parameters to adjust the throttle position sensor TPS in real time.
This page is only activated when the CAN line is connected and the ignition key is in ON position.

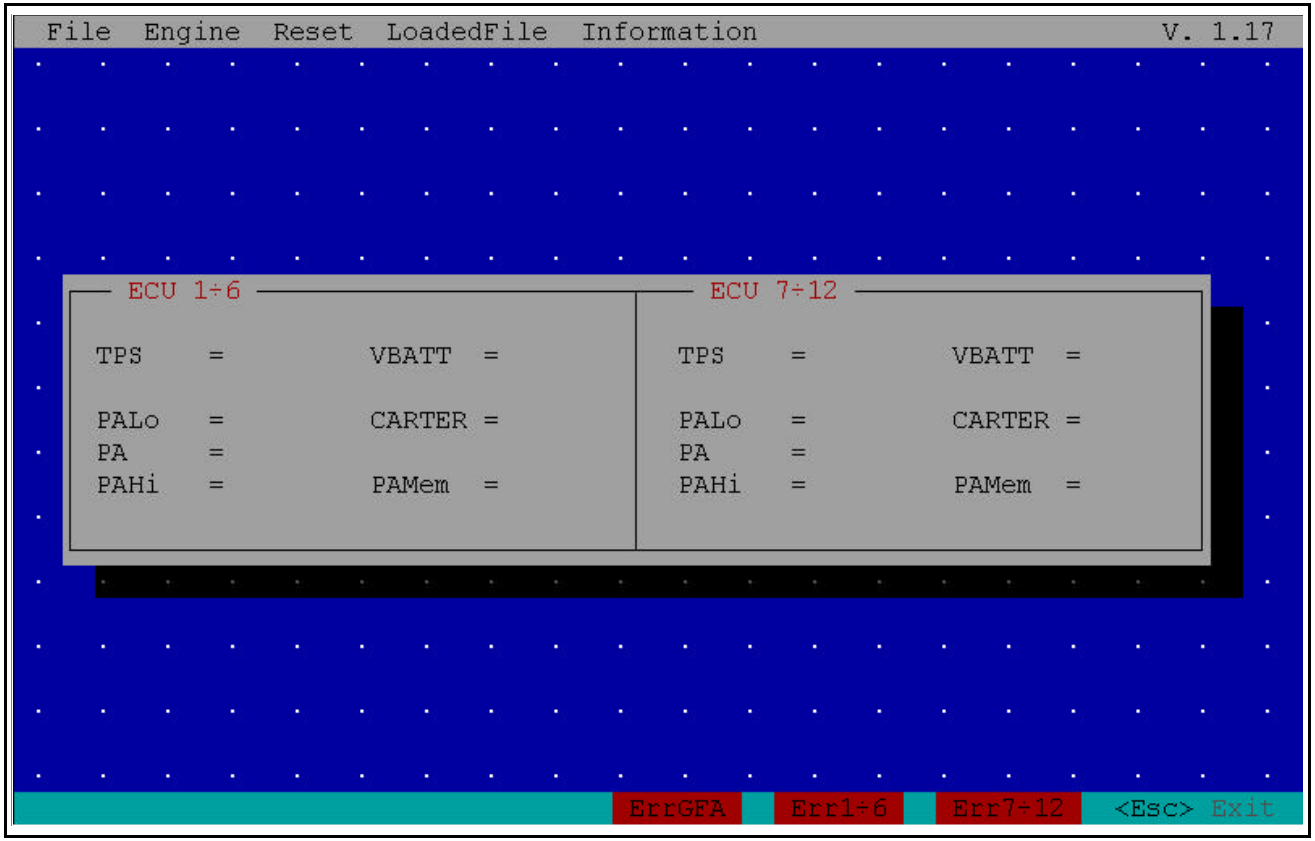


Throttle position sensor adjustment parameters table

**List of displays "in order":**
TPS: throttle opening angle; the values displayed are to be within the range "MIN 1.4 ± 0.2 %" and "MAX 73 ± 0.2 %";

VBATT: battery voltage "Volt";

PALo: displays the MIN value to be obtained for PA adjustment with CARTER = 0.0 and throttle case closed "BIT";

CARTER: displays the opening value requested of CARTER MOTOR;

PA: displays the “BIT” value of the throttle position sensor;

PAHi: displays the MAX value to be obtained to adjust the PA with CARTER = 0.0 and throttle case closed “BIT”;

PAMem: displays the minimum PA value found with  CARTER = 0.0 and throttle case closed “BIT”;

4 - RESET (only with CAN line interface activated and ignition key in ON position)

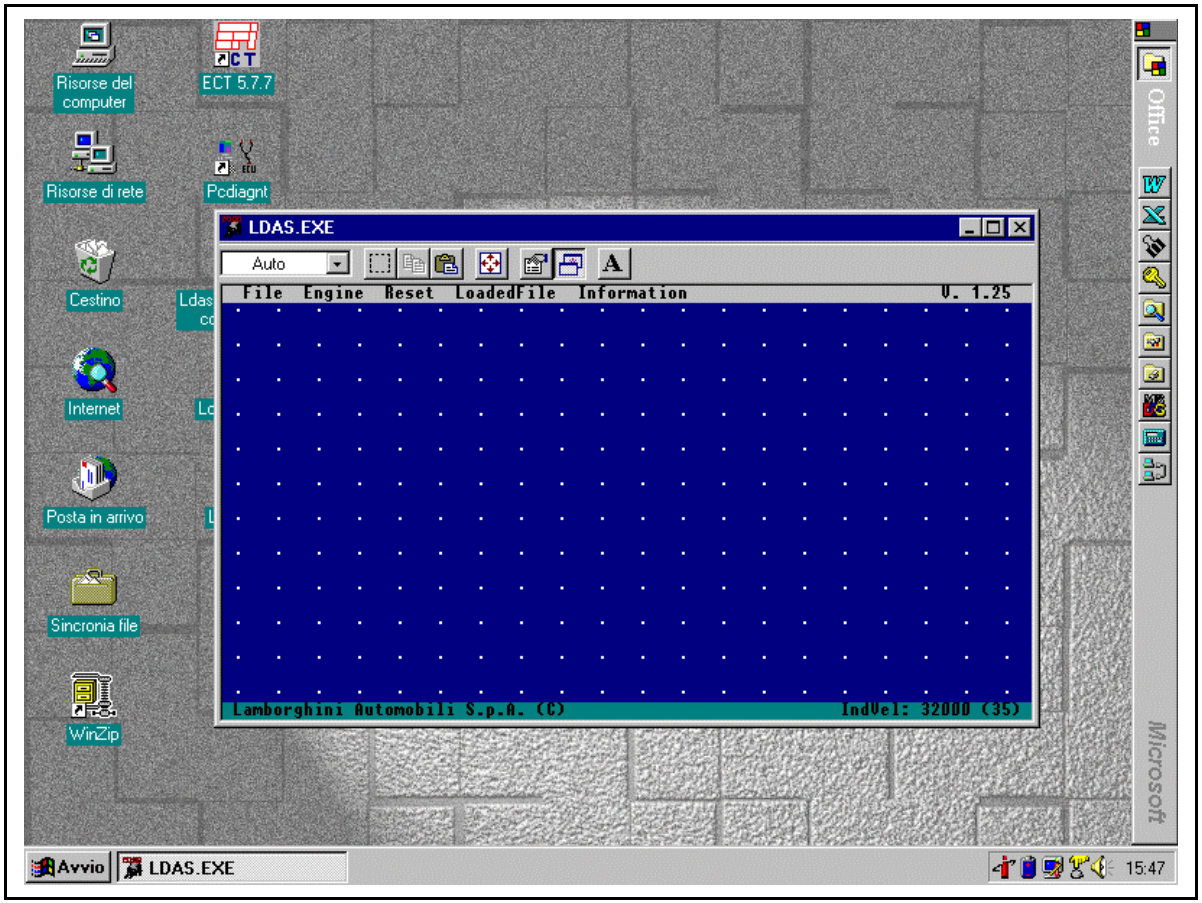


First page when LDAS is opened

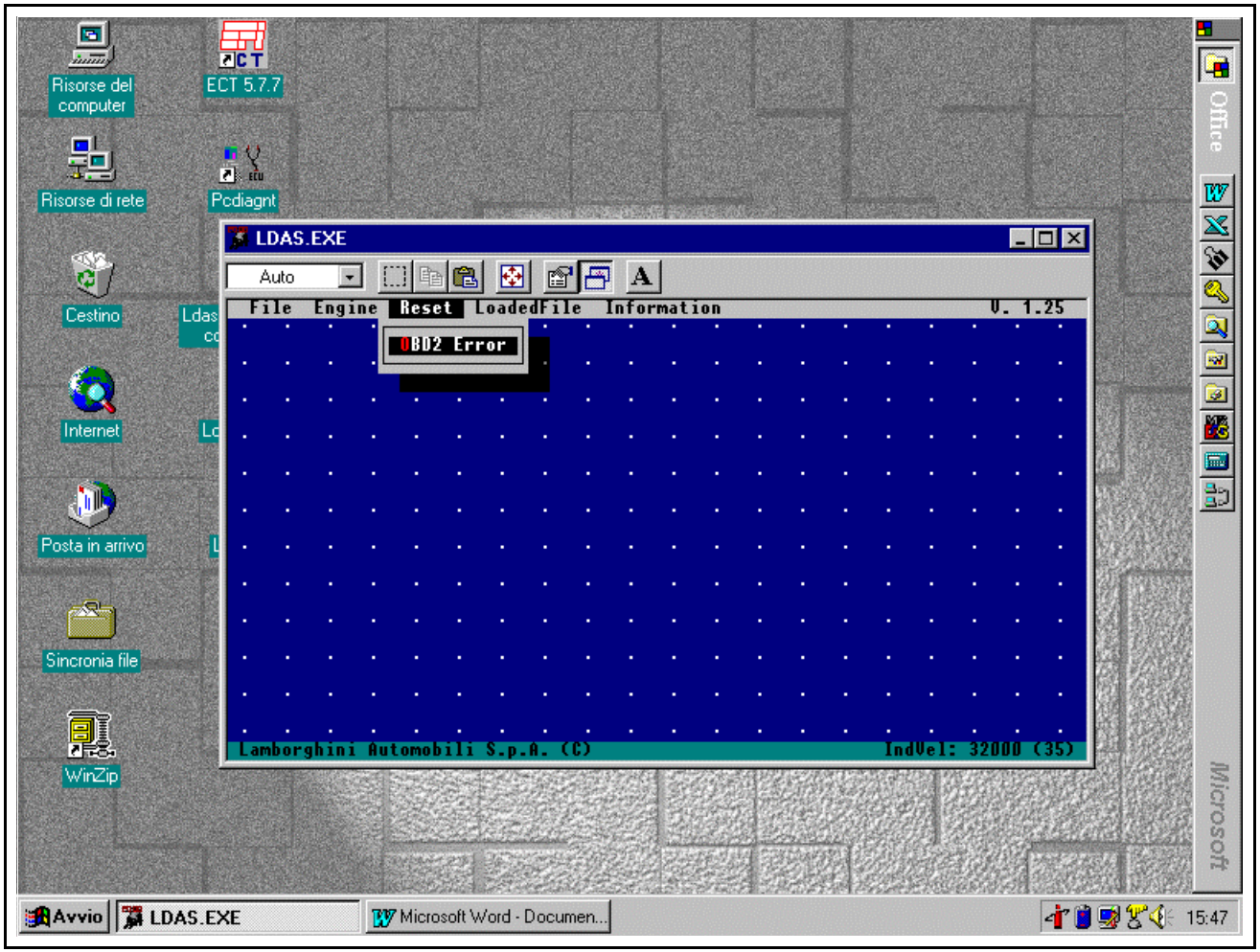


To delete errors on the LIE select RESET, OBD2 Error and press the ENTER key

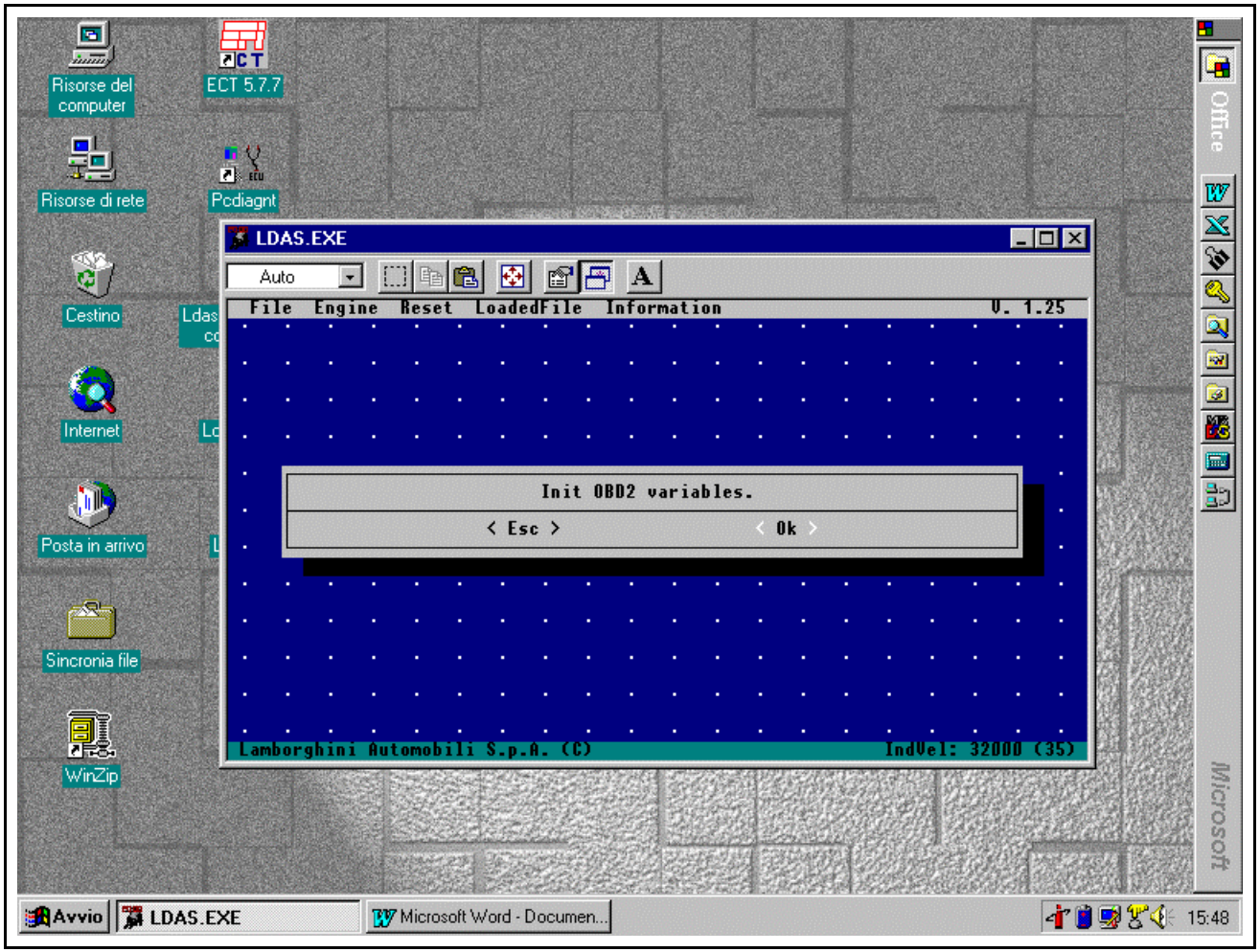


Select OK and press the ENTER key

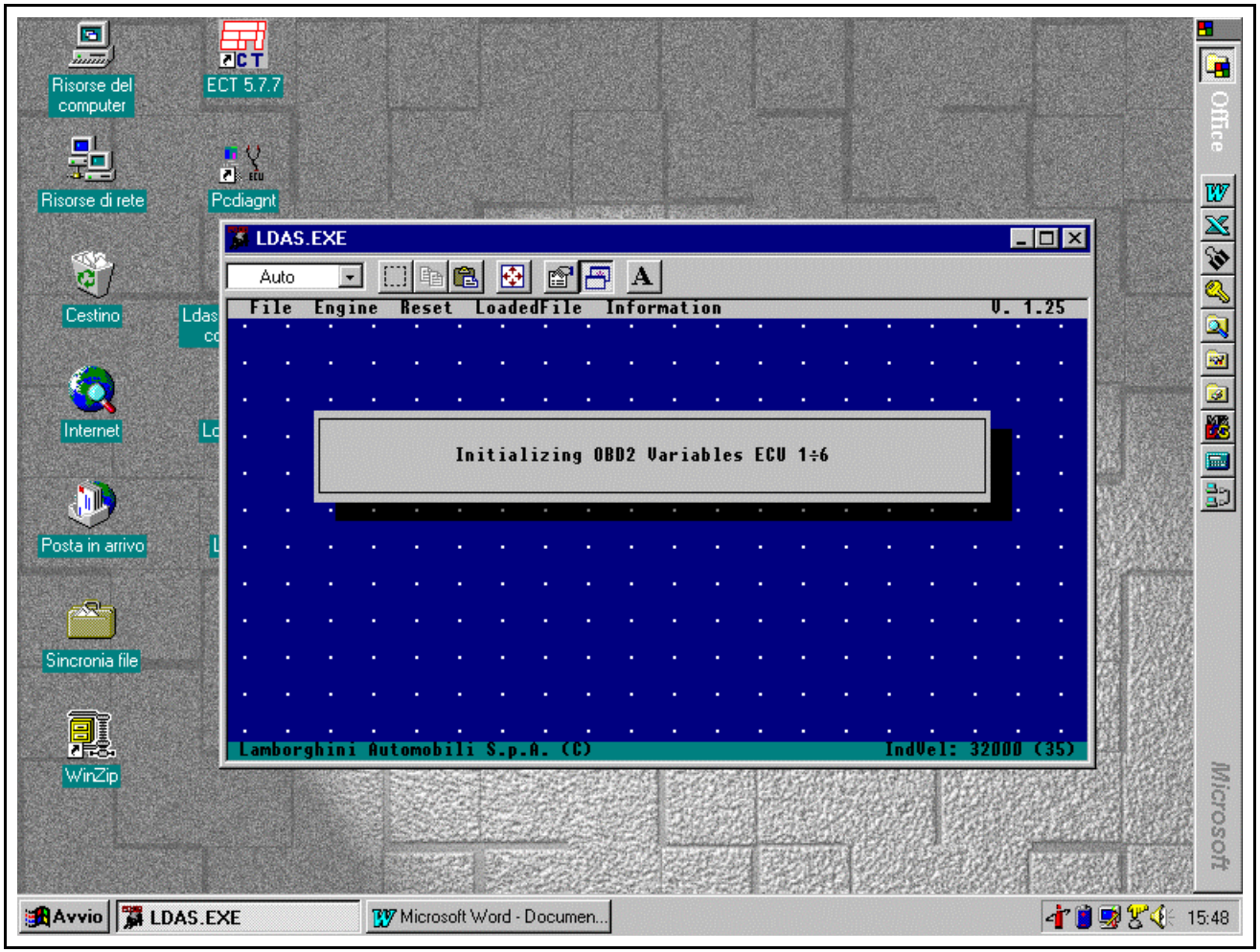


LDAS is initialising the control unit 1-6

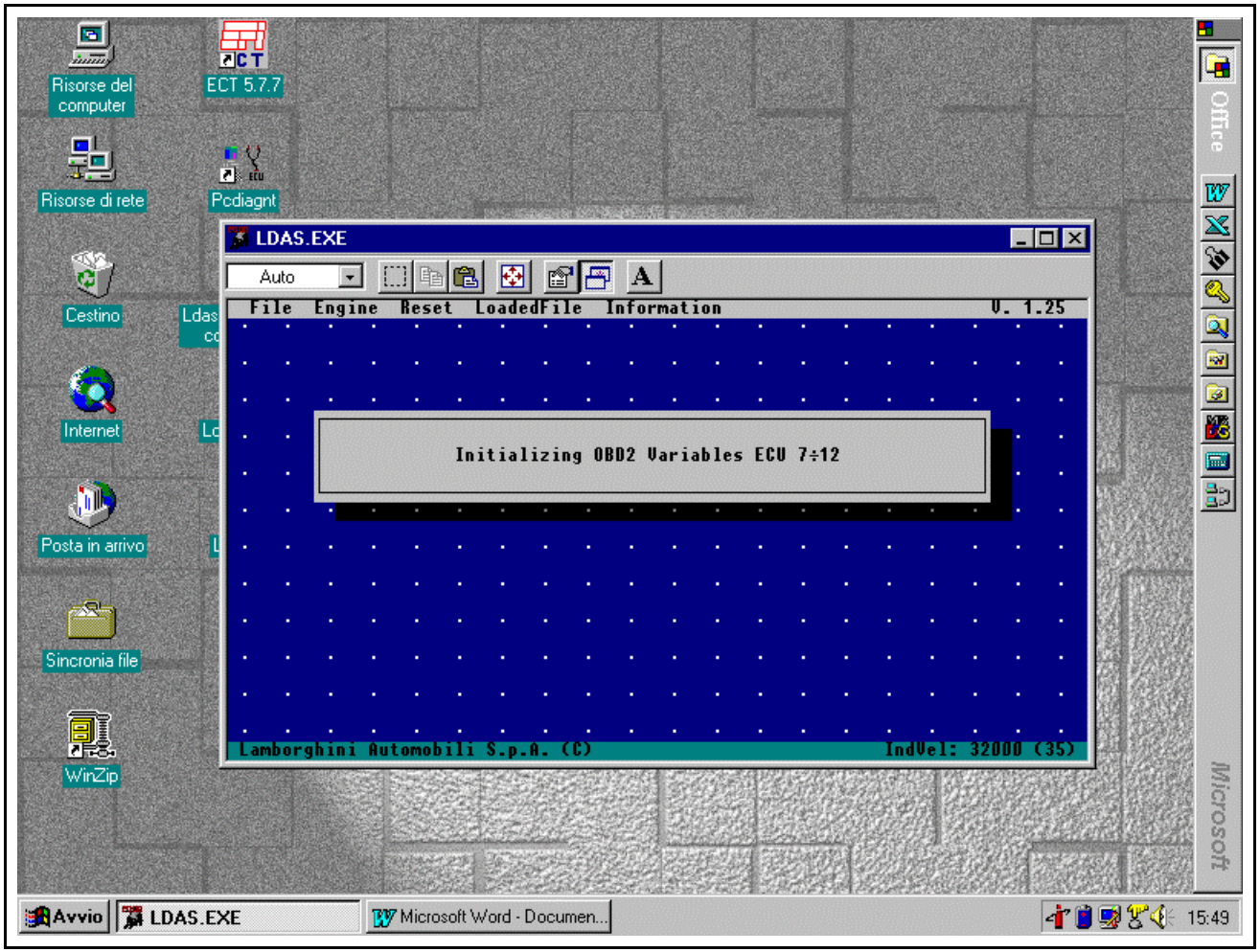


LDAS is initialising the control unit 7-12

4.1 OBD2 Error
Accesses the automatic dialogue window Initializing OBD2 Variables to display the reset that has taken place.

5 - LOADED FILE (only activated when a binary file has been loaded in memory and the hardware key is inserted)NOTE this function can be activated without connection to the CAN line and can be used for functions <F2> <F3> <F4> <F5>.

5.1 - Save in ASCII file
Writes the data loaded from the binary file in an ASCII file (.ACQ)
5.2 - Table of Usage
See 3.2
5.3 - Warning Threshold
See 3.3
5.4 - Starting Attempts
See 3.4
5.5 - Error Code
See 3.5
5.6 - Version
Displays software and hardware information regarding the control units from which the *.LIE file has been generated.

6 - INFORMATION

6.1 - CAN Line
Only activated when connected to the car
Displays software and hardware information regarding the control units connected
6.2 - LDAS
Displays the LDAS software releases.

**OBD II strategy error codes**

| Code | Description |
|---|---|
| P0300 | RANDOM MISFIRE DETECTED |
| P1301 | BANK 1/6 RANDOM MISFIRE DETECTED STRATEGY I |
| P1302 | BANK 7/12 RANDOM MISFIRE DETECTED STRATEGY I |
| P1303 | BANK 1/6 RANDOM MISFIRE DETECTED STRATEGY II |
| P1304 | BANK 7/12 RANDOM MISFIRE DETECTED STRATEGY II |
| P1305 | BANK 1/6 RANDOM MISFIRE DETECTED STRATEGY III |
| P1306 | BANK 7/12 RANDOM MISFIRE DETECTED STRATEGY III |
| P0301 | CYLINDER 1 MISFIRE DETECTED |
| P0302 | CYLINDER 2 MISFIRE DETECTED |
| P0303 | CYLINDER 3 MISFIRE DETECTED |
| P0304 | CYLINDER 4 MISFIRE DETECTED |
| P0305 | CYLINDER 5 MISFIRE DETECTED |
| P0306 | CYLINDER 6 MISFIRE DETECTED |
| P0307 | CYLINDER 7 MISFIRE DETECTED |
| P0308 | CYLINDER 8 MISFIRE DETECTED |
| P0309 | CYLINDER 9 MISFIRE DETECTED |
| P0310 | CYLINDER 10 MISFIRE DETECTED |
| P0311 | CYLINDER 11 MISFIRE DETECTED |
| P0312 | CYLINDER 12 MISFIRE DETECTED |

| Code | Description |
|---|---|
| P0171 | FUEL SYSTEM TOO LEAN BANK 1/6 |
| P0172 | FUEL SYSTEM TOO RICH BANK 1/6 |
| P0174 | FUEL SYSTEM TOO LEAN BANK 7/12 |
| P0175 | FUEL SYSTEM TOO RICH BANK 7/12 |
| P0420 | CATALYST SYSTEM EFFICIENCY BELOW THRESHOLD BANK 1/6 |
| P1401 | CATALYST OVERTEMP 1ST LEVEL BANK 1/6 |
| P1402 | CATALYST OVERTEMP 2ND LEVEL BANK 1/6 |
| P1403 | CATALYST TEMPERATURE CIRCUIT LOW INPUT BANK 1/6 |
| P1404 | CATALYST TEMPERATURE CIRCUIT HIGH INPUT BANK 1/6 |
| P0430 | CATALYST SYSTEM EFFICIENCY BELOW THRESHOLD BANK 7/12 |
| P1405 | CATALYST OVERTEMP 1ST LEVEL BANK 7/12 |
| P1406 | CATALYST OVERTEMP 2ND LEVEL BANK 7/12 |
| P1407 | CATALYST TEMPERATURE CIRCUIT LOW INPUT BANK 7/12 |
| P1408 | CATALYST TEMPERATURE CIRCUIT HIGH INPUT BANK 7/12 |
| P0125 | EXCESSIVE TIME TO ENTER CLOSED LOOP FUEL CONTROL |
| P0131 | LAMBDA SENSOR CIRCUIT LOW VOLTAGE BANK 1/6 SENSOR 1 |
| P0132 | LAMBDA SENSOR CIRCUIT HIGH VOLTAGE BANK 1/6 SENSOR 1 |
| P0133 | LAMBDA SENSOR CIRCUIT SLOW RESPONSE BANK 1/6 SENSOR 1 |
| P0134 | LAMBDA SENSOR CIRCUIT NO ACTIVITY DETECTED 1/6 SENSOR 1 |
| P0135 | LAMBDA SENSOR HEATER CIRCUIT MALFUNCTION 1/6 SENSOR 1 |

| Code | Description |
|---|---|
| P0151 | LAMBDA SENSOR CIRCUIT LOW VOLTAGE BANK 7/12 SENSOR 1 |
| P0152 | LAMBDA SENSOR CIRCUIT HIGH VOLTAGE BANK 7/12 SENSOR 1 |
| P0153 | LAMBDA SENSOR CIRCUIT SLOW RESPONSE BANK 7/12 SENSOR 1 |
| P0154 | LAMBDA SENSOR CIRCUIT NO ACTIVITY DETECTED 7/12 SENSOR 1 |
| P0155 | LAMBDA SENSOR HEATER CIRCUIT MALFUNCTION 7/12 SENSOR 1 |
| P0137 | LAMBDA SENSOR CIRCUIT LOW VOLTAGE BANK 1/6 SENSOR 2 |
| P0138 | LAMBDA SENSOR CIRCUIT HIGH VOLTAGE BANK 1/6 SENSOR 2 |
| P0140 | LAMBDA SENSOR CIRCUIT NO ACTIVITY DETECTED 1/6 SENSOR 2 |
| P0141 | LAMBDA SENSOR HEATER CIRCUIT MALFUNCTION 1/6 SENSOR 2 |
| P0157 | LAMBDA SENSOR CIRCUIT LOW VOLTAGE BANK 7/12 SENSOR 2 |
| P0158 | LAMBDA SENSOR CIRCUIT HIGH VOLTAGE BANK 7/12 SENSOR 2 |
| P0160 | LAMBDA SENSOR CIRCUIT NO ACTIVITY DETECTED 7/12 SENSOR 2 |
| P0161 | LAMBDA SENSOR HEATER CIRCUIT MALFUNCTION 7/12 SENSOR 2 |
| P0336 | CRANKSHAFT POSITION SENSOR CIRCUIT RANGE/PERFORMANCE |
| P0341 | CAMSHAFT POSITION SENSOR CIRCUIT RANGE/PERFORMANCE |
| P1310 | ENGINE SIGNALS SEQUENCE |
| P0106 | MANIFOLD ABSOLUTE PRESSURE CIRCUIT RANGE / PERFORMANCE |
| P0107 | MANIFOLD ABSOLUTE PRESSURE CIRCUIT LOW INPUT |
| P0108 | MANIFOLD ABSOLUTE PRESSURE CIRCUIT HIGH INPUT |
| P1106 | 1/6 MANIFOLD ABSOLUTE PRESSURE SENSOR MALFUNCTION |

| Code | Description |
|---|---|
| P1107 | 7/12 MANIFOLD ABSOLUTE PRESSURE SENSOR MALFUNCTION |
| P1101 | LOW BATTERY VOLTAGE |
| P1102 | HIGH BATTERY VOLTAGE |
| P1503 | CARTER FEEDBACK (carter driver not found) |
| P1504 | CARTER SWITCH (carter motor switch not found) |
| P0506 | IDLE CONTROL SYSTEM RPM LOWER THAN EXPECTED |
| P0507 | IDLE CONTROL SYSTEM RPM HIGHER THAN EXPECTED |
| P1501 | CARTER POSITION II f(sec-pos-rpm) |
| P1502 | CARTER POSITION I f(sec-pos) |
| P0116 | ENGINE COOLANT TEMPERATURE CIRCUIT RANGE/PERFORMANCE |
| P0117 | ENGINE COOLANT TEMPERATURE CIRCUIT LOW INPUT |
| P0118 | ENGINE COOLANT TEMPERATURE CIRCUIT HIGH INPUT |
| P1116 | BANK 1/6 ENGINE COOLANT TEMPERATURE SENSOR MALFUNCTION |
| P1117 | BANK7/12 ENGINE COOLANT TEMPERATURE SENSOR MALFUNCTION |
| P0111 | INTAKE AIR TEMPERATURE CIRCUIT RANGE / PERFORMANCE |
| P0112 | INTAKE AIR TEMPERATURE CIRCUIT LOW INPUT |
| P0113 | INTAKE AIR TEMPERATURE CIRCUIT HIGH INPUT |
| P1111 | BANK 1/6 INTAKE AIR TEMPERATURE SENSOR MALFUNCTION |
| P1112 | BANK 7/12 INTAKE AIR TEMPERATURE SENSOR MALFUNCTION |
| P0121 | THROTTLE POSITION CIRCUIT RANGE / PERFORMANCE |

| Code | Description |
|---|---|
| P0122 | THROTTLE POSITION CIRCUIT LOW INPUT |
| P0123 | THROTTLE POSITION CIRCUIT HIGH INPUT |
| P1121 | THROTTLE POSITION MALFUNCTION REVEALED BY ECU 1/6 |
| P1122 | THROTTLE POSITION MALFUNCTION REVEALED BY ECU 7/12 |
| P1506 | CARTER FUEL SHUT OFF FOR RPM AT STARTING (FSO1,FSO2) |
| P1507 | CARTER FUEL SHUT OFF FOR POSITION II (FSO3) |
| P1508 | CARTER FUEL SHUT OFF FOR FEEDBACK (FSO4) |
| P0600 | SERIAL COMMUNICATION LINK MALFUNCTION (OBDII) |
| P0605 | INTERNAL CONTROL MODULE |
| P1601 | IDENTIFICATION LIE PROBLEM (earth pin not identified) |
| P1602 | CAN COMMUNICATION LINK MALFUNCTION |
| P0441 | EVAP. EMISSION CONTROL SYSTEM INSUFFICIENT PURGE FLOW |
| P0442 | EVAPORATIVE EMISSION CONTROL SYSTEM LEAK DETECTED |
| P0443 | PURGE CONTROL VALVE MALFUNCTION |
| P0446 | VENT CONTROL VALVE MALFUNCTION |
| P0450 | PRESSURESENSOR MALFUNCTION |