18 - CLUTCH

CONTENTS

DESCRIPTION P. 3

SPECIFICATIONS AND DATA P. 4

REMOVAL AND REFIT P. 5

ASSEMBLY P. 5

CHECKS AND ADJUSTMENTS P. 5
Clutch pedal adjustment and hydraulic circuit bleeding
Clutch control lever and tie-rod adjustment on a new clutch

DESCRIPTION

The clutch is a dry, single plate type with flexible coupling and diaphragm spring.
Disengagement is by means of a thrust bearing: the mechanism is the thrusting type.
The disengagement is hydraulic.

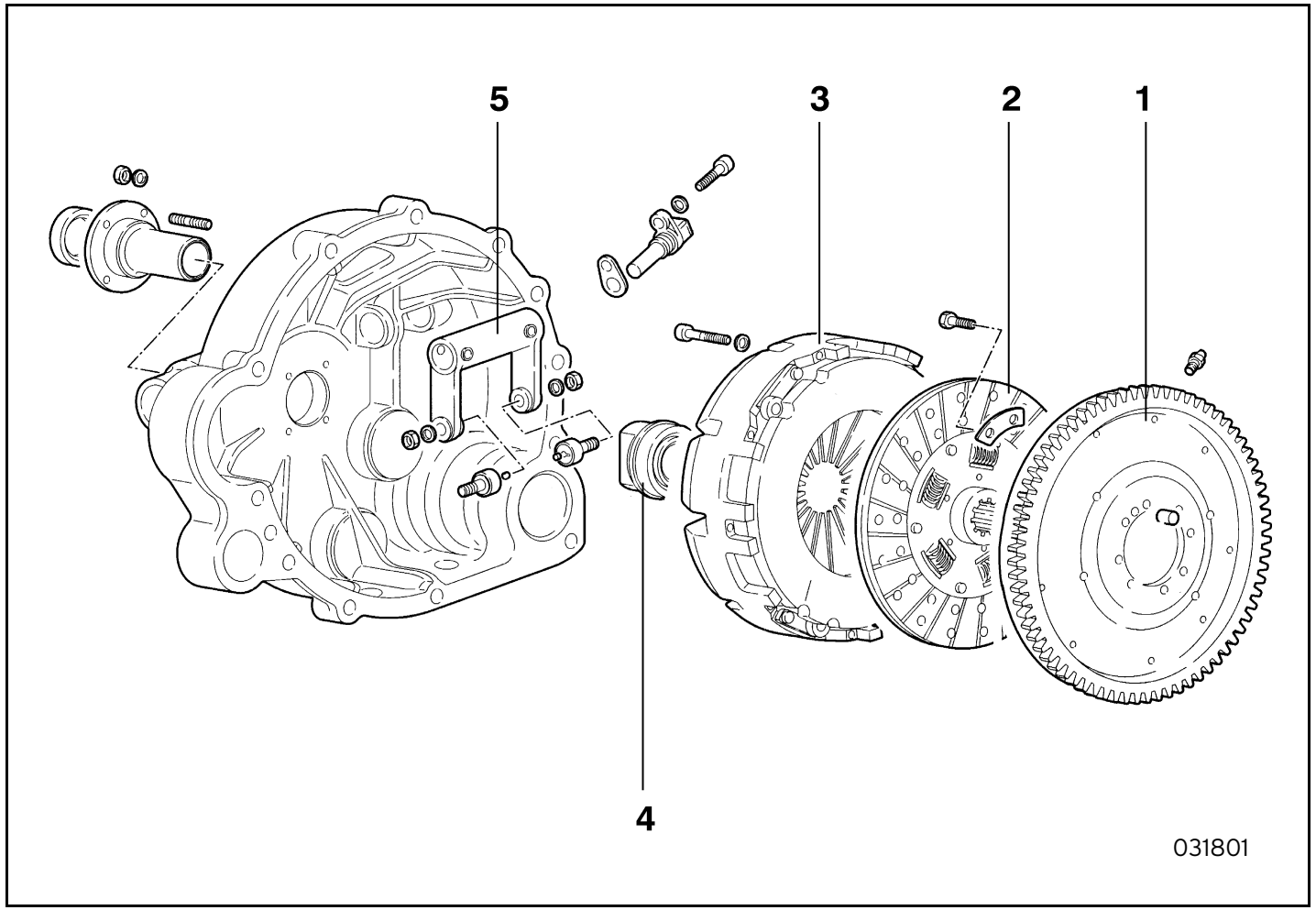

1 Flywheel
2 Clutch disk
3 Pressure plate assembly
4 Thrust bearing
5 Control fork

Fig. 1 - Clutch assembly

SPECIFICATIONS AND DATA

Type	Dry, single plate
Friction disk outer diameter	272
Friction disk inner diameter	165
Clutch disk thickness (with 9900 N load)	7.7
Max. disk wear	1.5
Thrust bearing max. stroke	8.5 ± 1

Flywheel	
Flywheel thickness	35.00 to 35.25
Max. reduction thickness	1
Surface roughness	1.6 Ra

Clutch pump	
Piston bore	22.2
Total stroke	28.5

REMOVAL AND REFIT

To reach the clutch, remove the engine-gearbox group from the car (see section 10).

ASSEMBLY

- fit the flywheel and tighten the bolts to the prescribed torque;
- fit the clutch disk-pressure plate. Use tool No. 962195007 to centre the disk;
- tighten the pressure plate bolts to the prescribed torque.

⚠ Assemble the clutch disk with the flexible coupling protrusion facing the pressure plate.

CHECKS AND ADJUSTMENTS

Clutch pedal adjustment and hydraulic circuit bleeding.

Adjust the brake pedal leaving a clearance of 1 mm then align the clutch pedal with that of the brake.
Periodically bleed off the air from the clutch hydraulic circuit through the small nut on the rear of the hydraulic control cylinder (arrow).

Clutch control lever and tie-rod adjustment on a new clutch.
Adjust the clutch control lever to obtain an inclination of about 5°.
Adjust the tie-rod to these values:
distance **a**: 11 mm
protrusion **b**: 8 mm.

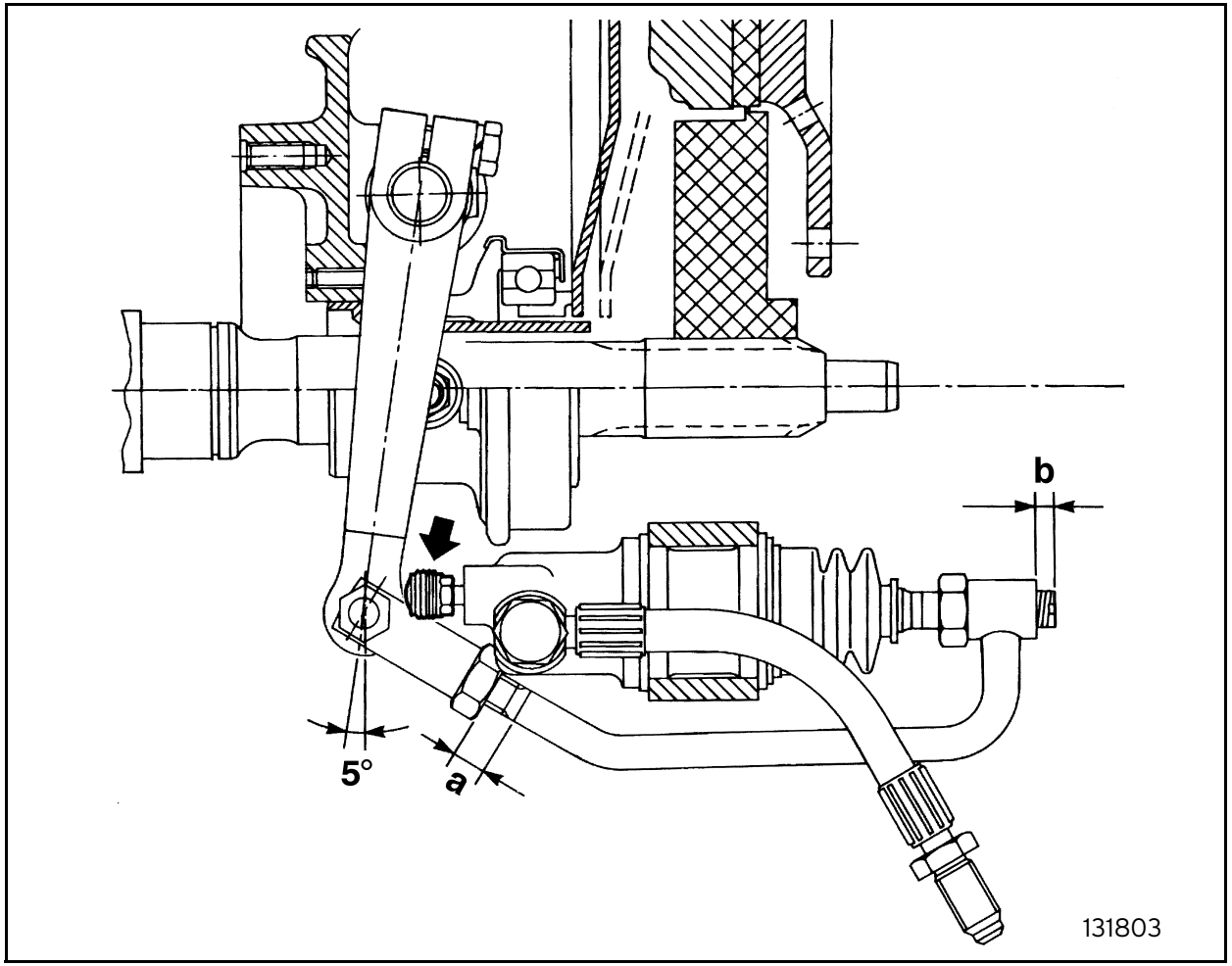

Fig. 2 - Clutch control checks and adjustments