Index

01 - SPECIAL TOOLS

⚠ Some special tools included in the following list refer to modules prior to those described in this manual.

	SPECIAL TOOLS
Tool N°	Description
009008019	Wrench for cylinder head tightening
69190056	PC CAN interface
69190057	Dongle
69190059	CD ROM
69190061	Resistance for Diablo 98/99 and Diablo 6.0 vehicles
69495298	Set of resin protections Diablo 6.0
960095012	Front differential driving ring-nut wrench/Front driving flange ring-nut wrench
961195002	Graduated disk for engine timing
961195003	Exhaust valve holder for off car adjustment
961195004	Intake valve holder for off car adjustment
961195014	Valve adjustment shims removal tool
961195026	Base for dial on cylinder head
961195027	Liner stop
961195042	Camshaft gear locking tool
961295038	Phase variator wrench

	SPECIAL TOOLS
Tool N°	Description
961495012	Crankshaft turning tool
961495014	Crankshaft support flywheel side
961495016	Crankshaft support timing side
961595001	Oil pump seal assembly guide
961595002	Pad to insert oil seal on engine oil pump sump
962195007	Clutch centring tool
962495019	Gearbox cover mock-up block
962495025	Transmission shaft output ring-nut wrench (ex speedometer)
962495032	Gearbox ratchet adjustment gauge
962495037	Front driving transmission shaft ring-nut wrench (4x4)
962495038	Rear driving gear ring-nut wrench
962495063	Gearbox shift lever housing mock-up frame
964300002	Diablo 6.0 ABS and air bag diagnostic interface
965195053	Front wheel hub ring-nut wrench
965195067	Hub holder bearing ring-nut wrench (not shown)
965295010	Rear wheel hub pin wrench
965295028	Rear wheel hub ring-nut wrench

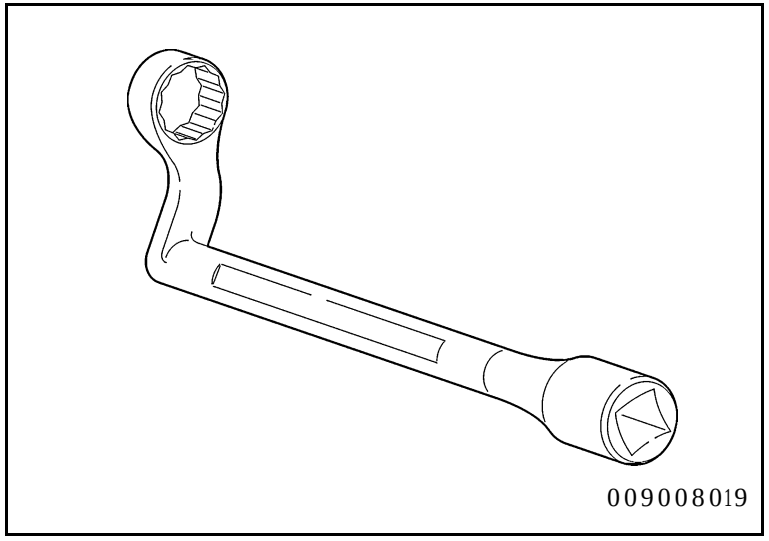

009008019 Wrench for cylinder head tightening

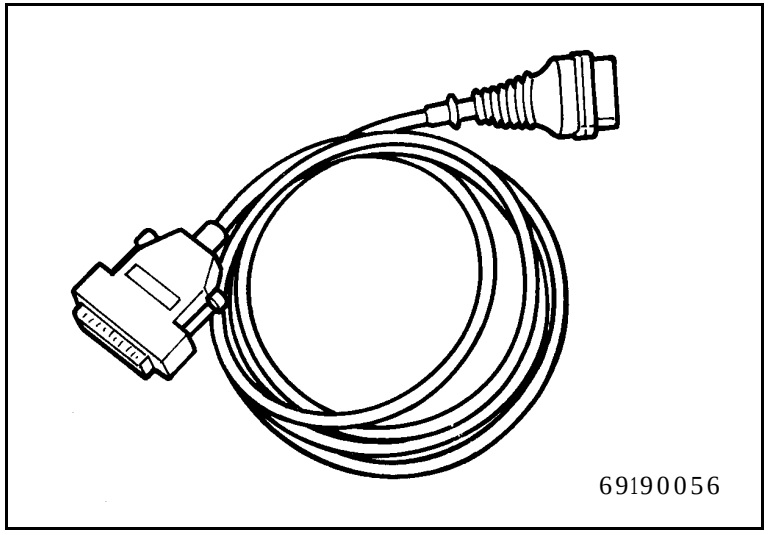

69190056 PC CAN interface

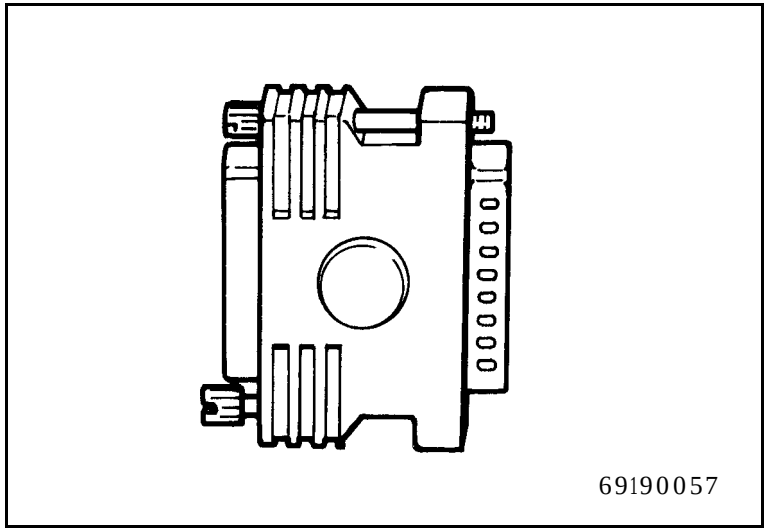

69190057 Chiave HW

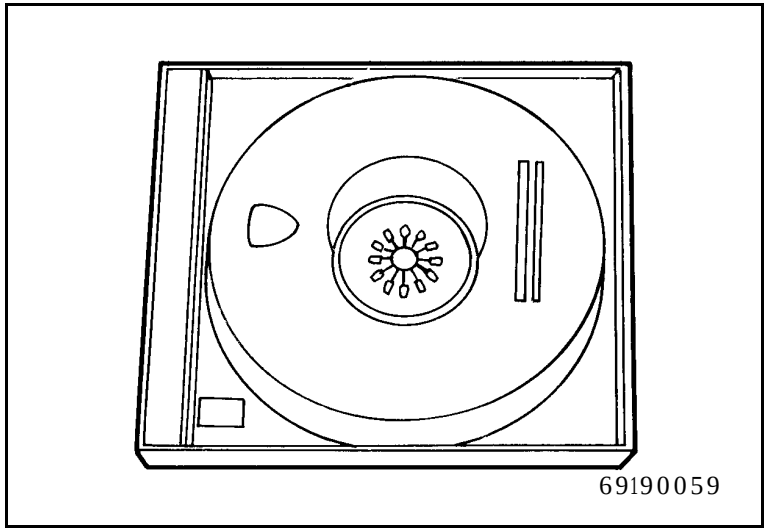

69190059 CD ROM

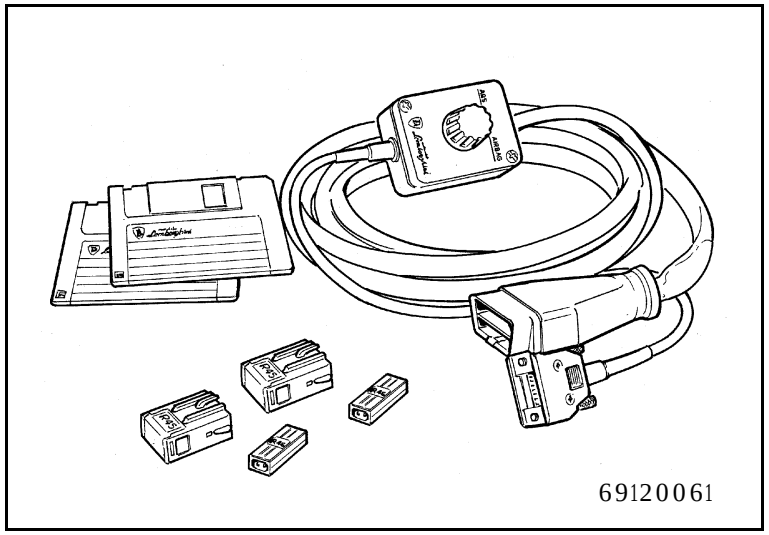

69190061 Resistance for Diablo 98/99 and Diablo 6.0 vehicles

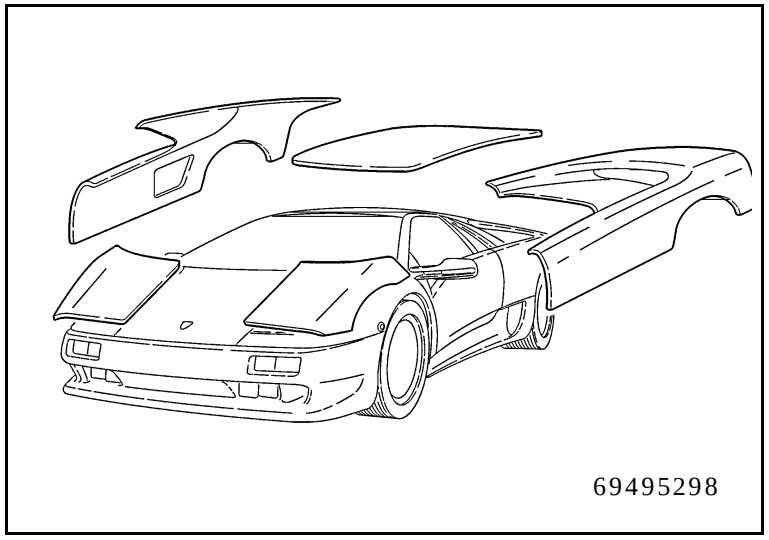

69495298 Set of resin protections Diablo 6.0

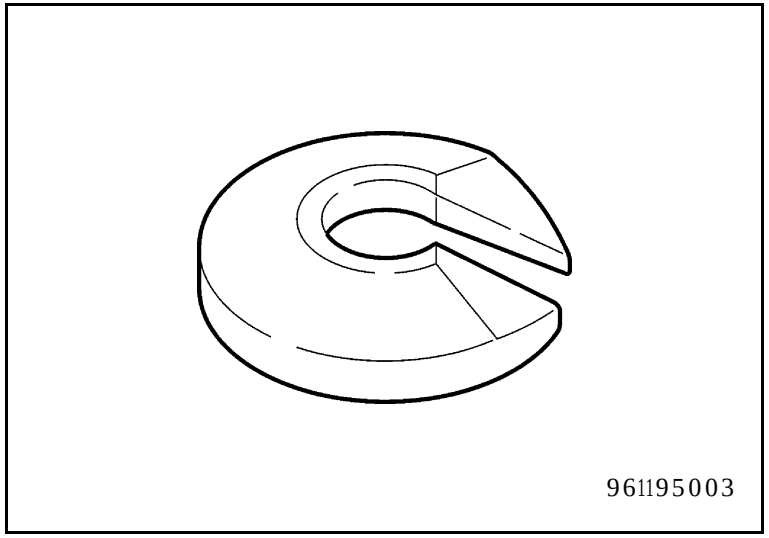

961195003 Exhaust valve holder for off car adjustment

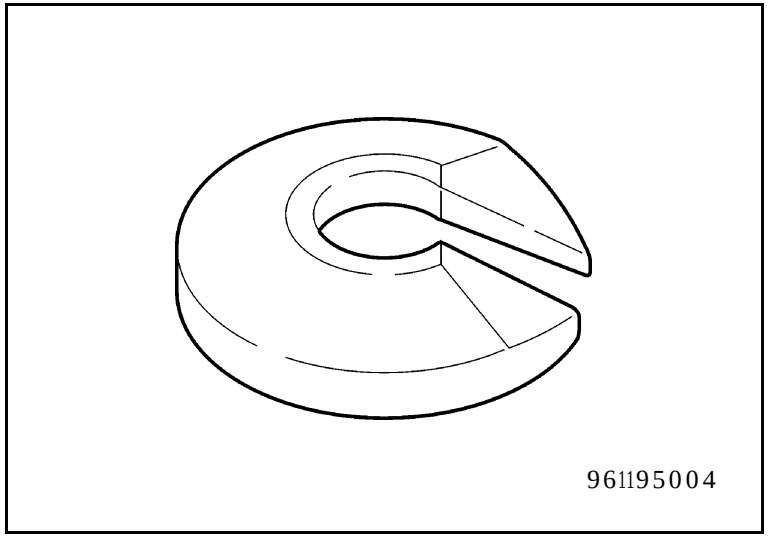

961195004 Intake valve holder for off car adjustment

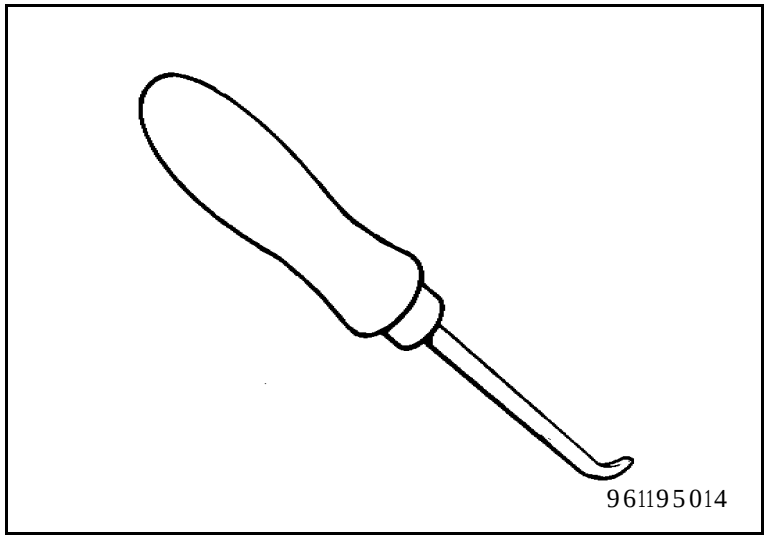

961195014 Valve adjustment shims removal tool

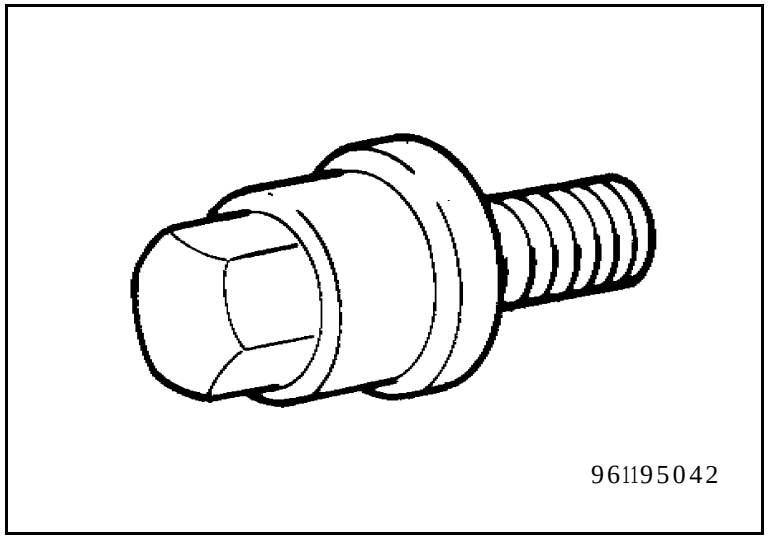

961195042 Camshaft gear locking tool

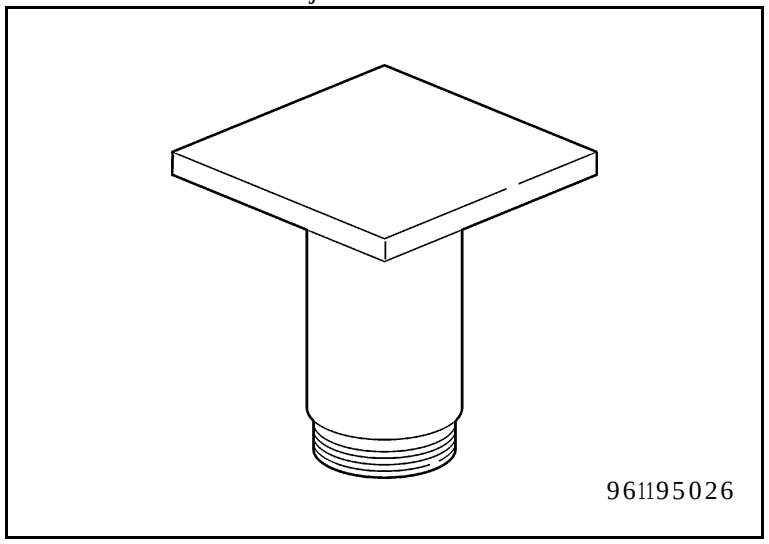

961195026 Base for dial on cylinder head

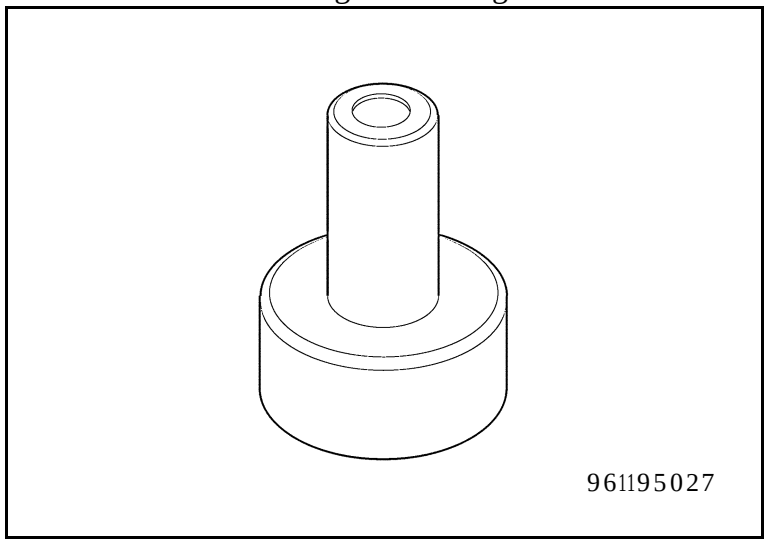

961195027 Liner stop

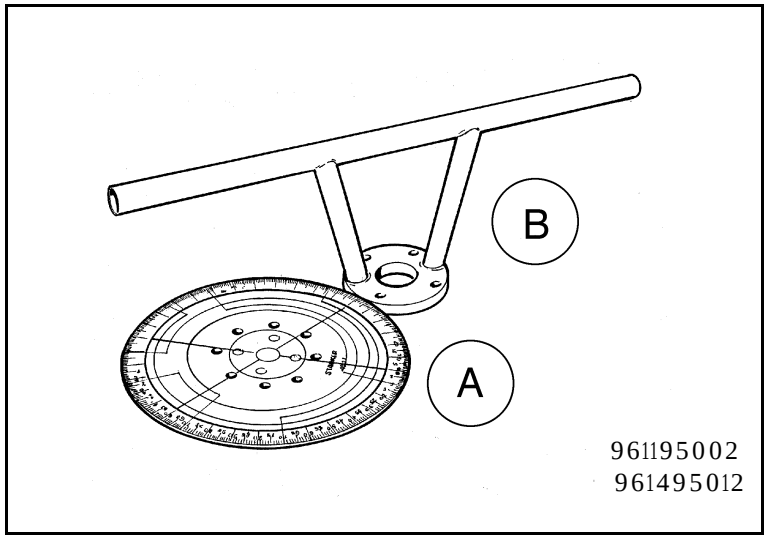

(A) 961195002 Graduated disk for engine timing
(B) 961495012 Crankshaft turning tool

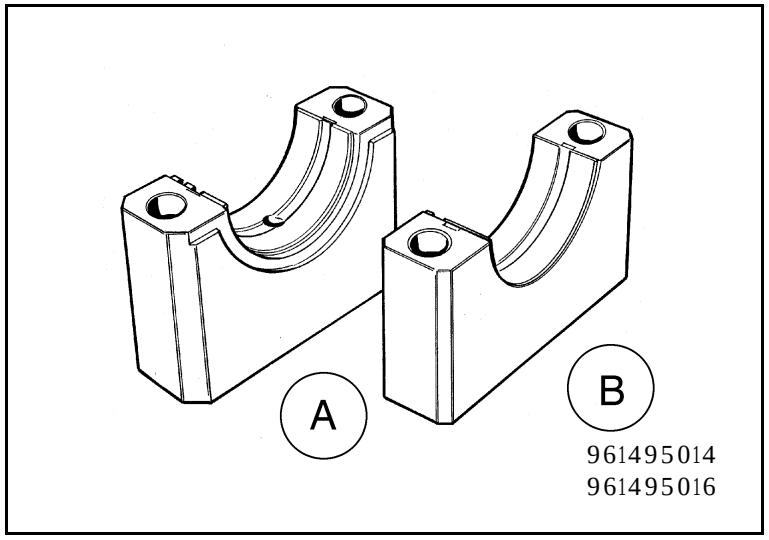

(A) 961495014 Crankshaft support flywheel side
(B) 961495016 Crankshaft support timing side

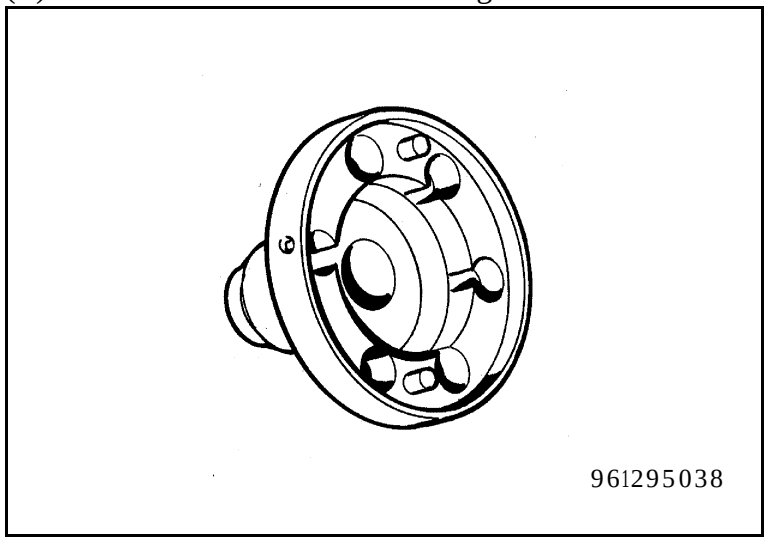

961295038 Phase variator wrench

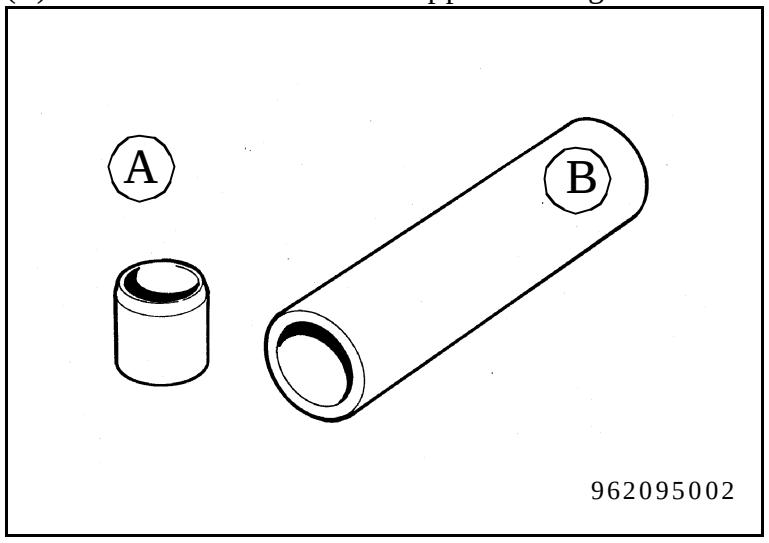

(A) 961595001 Oil pump seal assembly guide
(B) 961595002 Pad to insert oil seal on engine oil pump sump

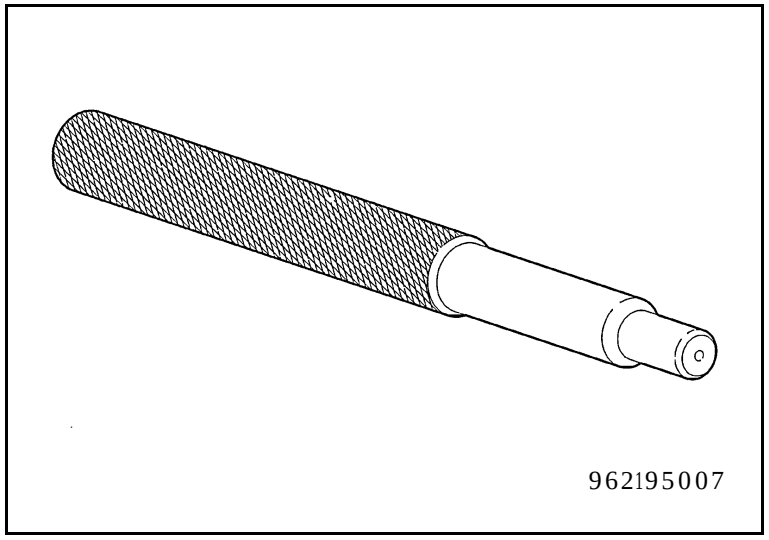

962195007 Clutch centring tool

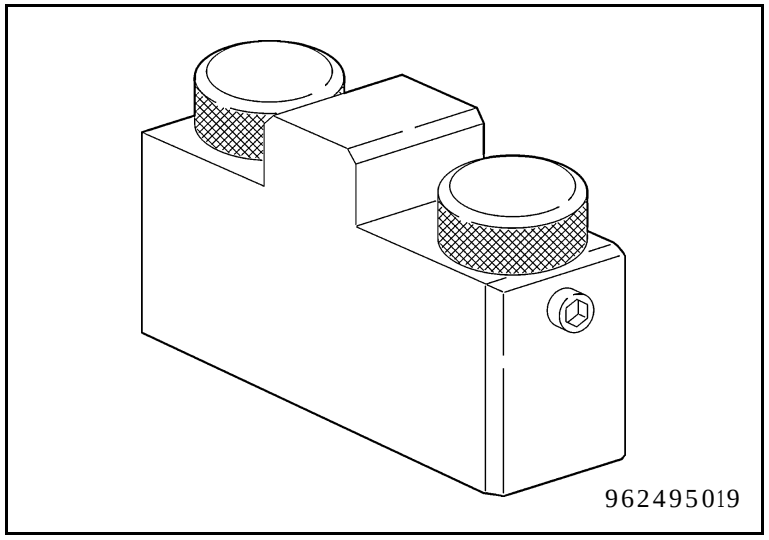

962495019 Gearbox cover mock-up block

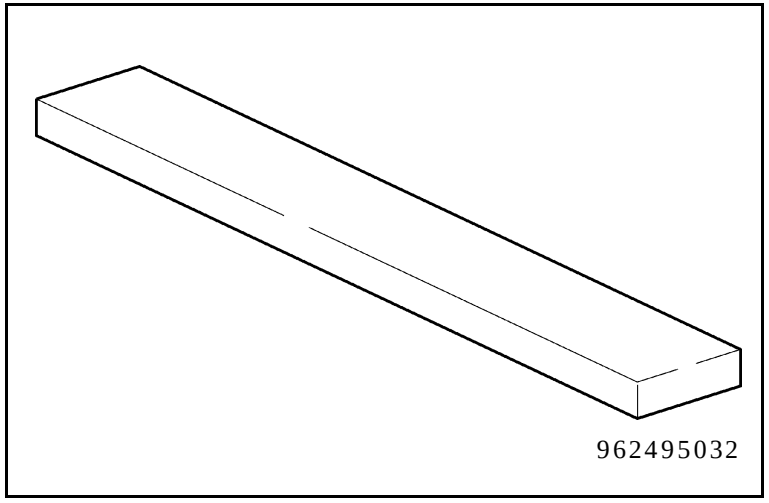

962495032 Gearbox ratchet adjustment gauge

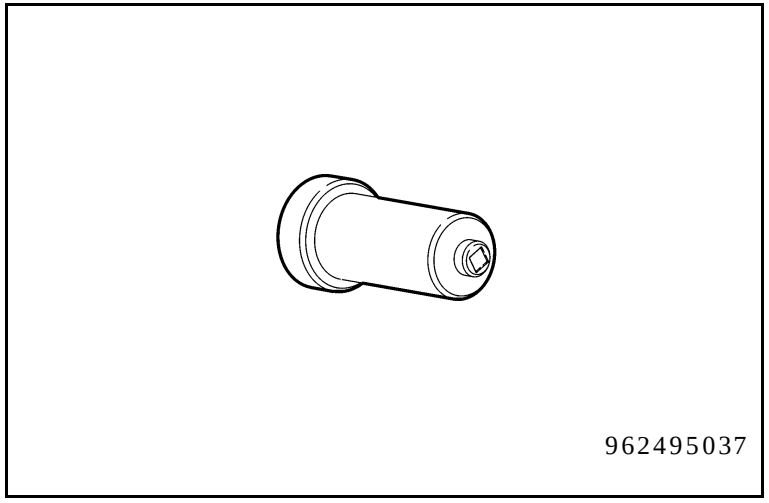

962495037 Front driving transmission shaft ring-nut wrench (4x4)

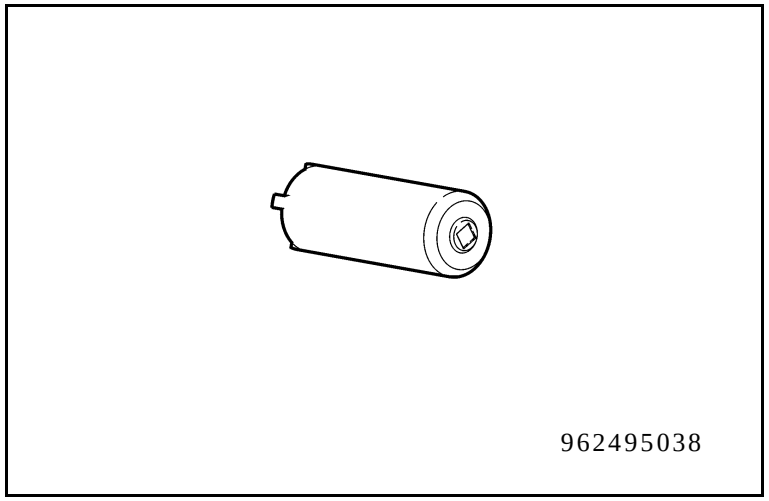

962495038 Rear driving gear ring-nut wrench

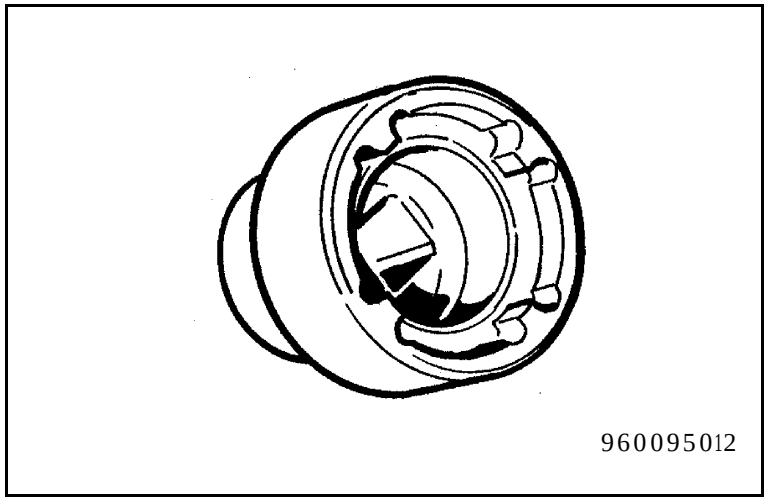

960095012 Front driving flange ring-nut wrench
Front differential driving ring-nut wrench

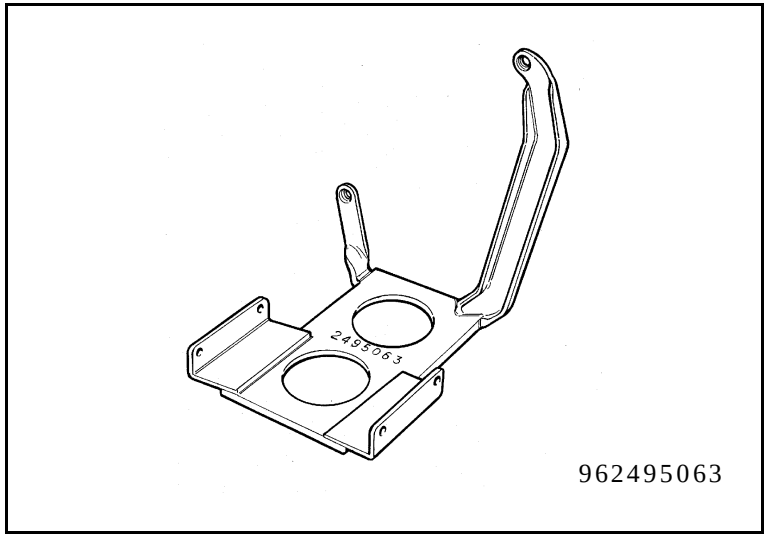

962495063 Gearbox shift lever housing mock-up frame

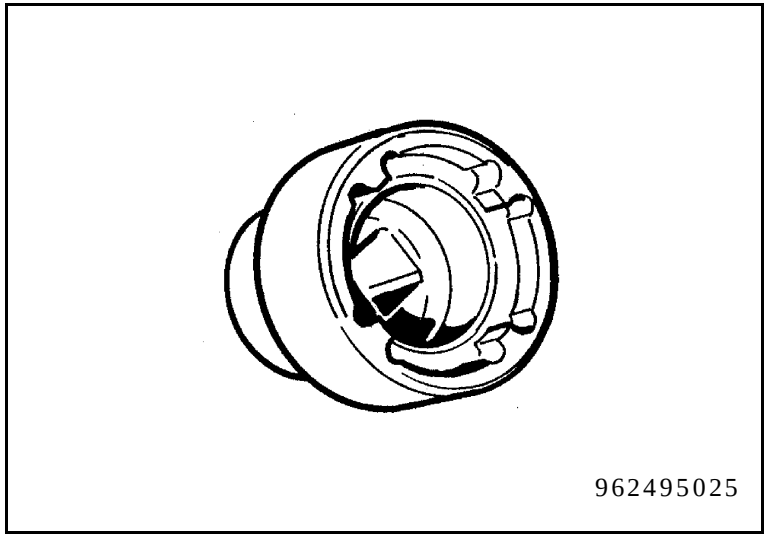

962495025 Transmission shaft output ring-nut wrench (ex speedometer)

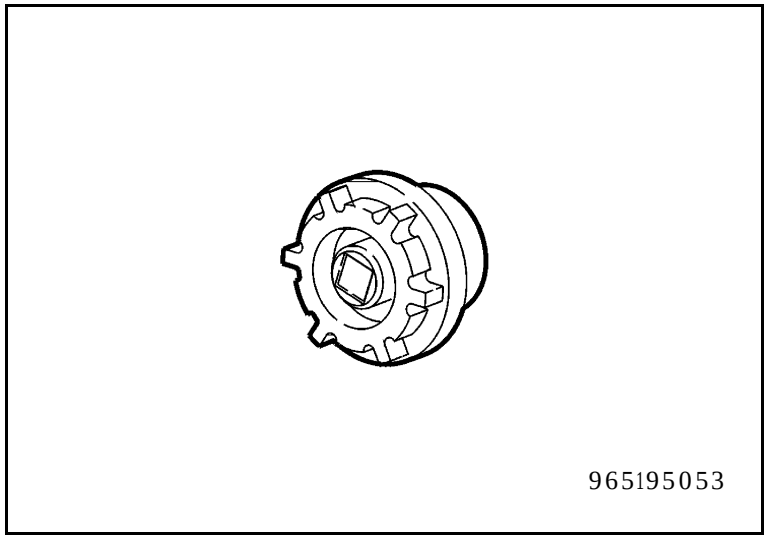

965195053 Front wheel hub ring-nut wrench

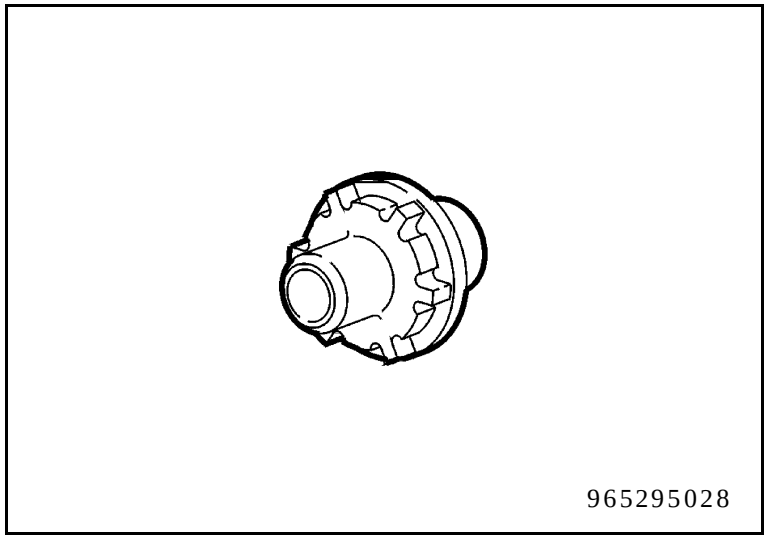

965295028 Rear wheel hub ring-nut wrench

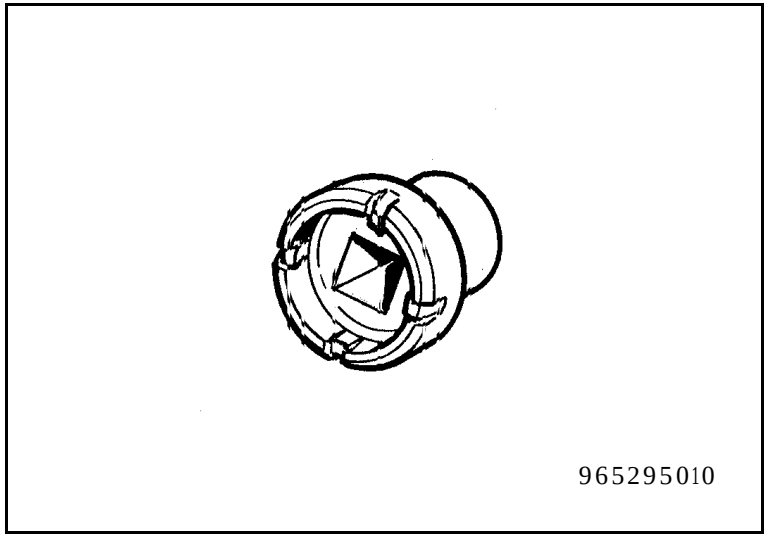

965295010 Rear wheel hub pin wrench

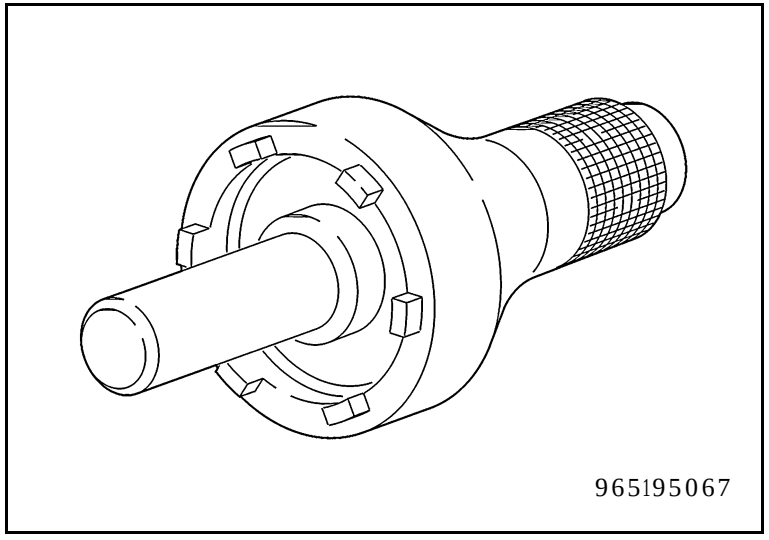

965195067 Hub holder bearing ring-nut wrench

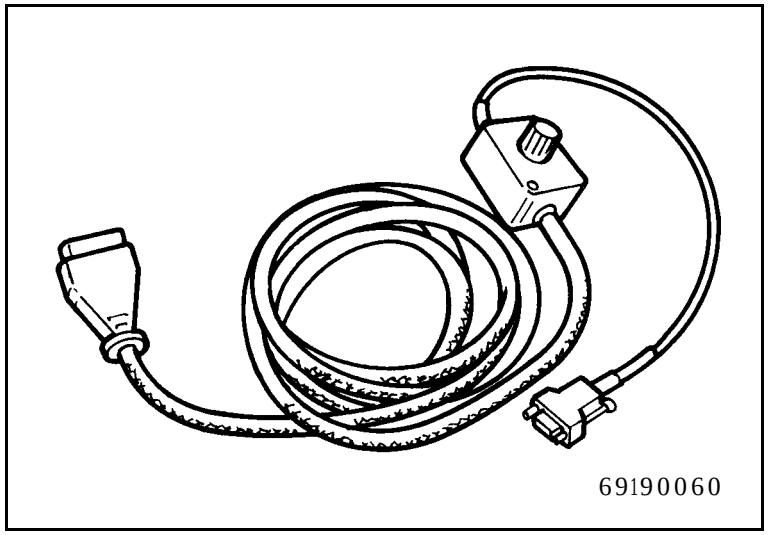

694300002 Diablo 6.0 ABS and air bag diagnostic interface