Index

55 - ELECTRICAL SYSTEM

CONTENTS

SPECIFICATIONS AND DATA P. 3
Electrical system
Alternator
Starter motor
List of bulbs

OPERATIONS P. 6
Precautions and warnings
Emergency start with external battery
Bulb replacement
Headlight beam adjustment (EEC vehicles)
Headlight beam adjustment (USA vehicles)

SPECIFICATIONS AND DATA

Electrical system

Type	A 12V negative to earth
Recharging system	Alternator and voltage regulator
Battery	12V – 90Ah – 420A
Current rate with engine off and switch deactivated	7 to 12 mA
Spark plugs Distance between electrodes	0.5 to 0.6

Alternator

Type	BOSCH
Rated voltage	14V
Rated current	150 A at 6000 rpm
Incorporated electronic voltage regulator	

Starter motor

Type	BOSCH
Rated voltage	12V
Rated power	2.2 kW
Current rate with load	60A
Current rate with no load	10A

For information concerning the control units layout, pin-out, electrical connections and electrical drawings see the Electrical Drawings Manual.

List of bulbs

USE	CONNECTION	POWER [WATT]	QUANTITY
Dipped headlights	PK 22 S – H3 HB4 (USA)	55 12	2 2
Main beams	H1 HB4 (USA)	55 60	2 2
Front side lights	W 2.2 x 9.5 d	5	2
Brake lights and rear side lights	BA 15 D	5/21	2
Centre brake light	Lamborghini p.n. 006331204		1
Rear fog light	BA 15 S	21	1
Reversing light	BA 15 S	21	1
Front turn indicators	BA 15 S	21	2
Number plate light	SV 8.5 – 8	5	2
Side turn indicators	BA 9 S T8–4	4	2
Rear turn indicators	BA 15 S	21	2
Flash light	PK 22 S – H3	55	2
Courtesy lights	SV 8.5 – 8 W 2.1 x 9.5 d	10 5	3 1
Front compartment light	LOW SV 8.5 – 8	5	1
Door light	W 2 x 4.6d	1.2	2
Fog light	PK 22 S – H3	55	2
Side markers (USA version)	W 2.1 x 9.5 d	3	4

OPERATIONS

Precautions and warnings

Never disconnect the system battery when the engine is running.
Do not start up the engine before connecting the battery.

- Do not use fast chargers to start the engine. Use either separate batteries or the special auxiliary battery;
- check carefully the exact polarity of the battery terminals when starting up with an auxiliary battery;
- always disconnect the earth cable first from the battery negative terminal when disconnecting the battery from the system;
- before connecting the battery to the system make sure that the latter is well insulated;
- wrong polarising of the electronic control units power supply (for example wrong polarising of the battery) can cause breakage;
- disconnect the earth cable from the battery negative terminal before removing electronic components;
- electrical measurements on electronic components must only be carried out with adequate measuring equipment;
- make sure that electronic device cables (length, type of conductor, positioning, clamping, shielding continuity where required, earthing, etc.) are correct for the system and that after maintenance have been carefully restored to the original condition;
- disconnect the system battery when recharging with external equipment;
- disconnect the external recharging equipment from the network before removing the clamps from the battery terminals;
- never insert or remove the connector from the electronic control units while powered;
- In the case of temperatures over 80°C (drying ovens) remove the electronic control units;
- when making connections, tighten the connector nuts (temperature, pressure sensors etc.) to the prescribed torque;
- electronic control unit testing at plugs, plug connections and electrical connections of components are only to be carried out using the appropriate equipment; never use improper tools such as metal wire, screwdrivers, clips or suchlike; besides the danger of short circuits these methods could damage the plug connections and subsequently cause contact problems.

When performing electrical welding on the car, always disconnect the batteries and remove the connectors from the electric control units and in particular from the LIE, GFA,SDM, ABS, KONI and air conditioning control units.

Before replacing a burnt-out fuse, always check the fault that caused it to blow. Only after eliminating the fault the circuit can be reactivated.

It is a good practice to disconnect the battery from the car network if the car is not to be used for a long period (several months). This prevents the battery charge from dropping below the minimum. Periodically check the voltage between the two terminals and if necessary recharge.

Emergency start with external battery

Never attempt to jump start a car with a frozen battery; it could break and cause further damage.

Never use fast battery chargers for emergency starts.

If the rules given below are not strictly adhered to, injuries or damage caused by acid leaking from the battery or overloading of the car electrical system could result.

Should this operation be necessary it is important to connect the cable exclusively in the point indicated and enlarged in figure 1. Use an external battery with the same voltage (12 Volts) and connecting cables of a suitable type (minimum cable cross section 25 mm^2) The above procedure can also be used to connect an external battery charger.
Proceed as follows:

- remove the ignition key;
- switch off all lights and electrical devices in the car;
- through cables connect the positive terminal of the emergency battery with the terminal indicated in figure 1;
- connect the negative terminal of the emergency battery as shown in figure 1;
- turn the ignition key to position 1;
- select the maximum temperature on the air conditioning system control panel;
- start up the engine then disconnect the emergency battery removing first the connection to earth then the positive terminal.

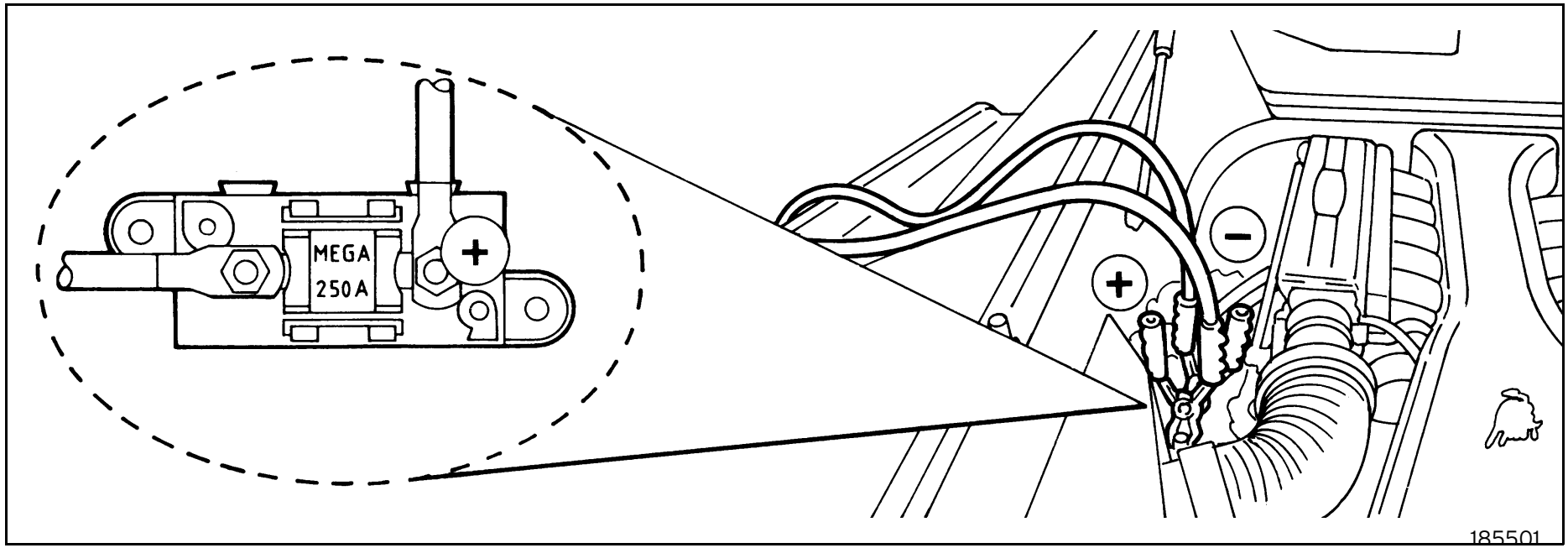

Fig. 1 - External battery connection

Bulb replacement

Avoid touching the halogen bulbs with your hands as this reduces the efficiency. If contact with the hands occurs, clean the bulb carefully with alcohol.

Dipped headlights (A) and main beam lights (B)
To reach a dipped headlight bulb remove the wheel and rectangular bulkhead on the front wheel housing near the side turn indicator or side marker.
Loosen the ring nut and draw back the rubber protection; release the clasps to free the bulb to be replaced.

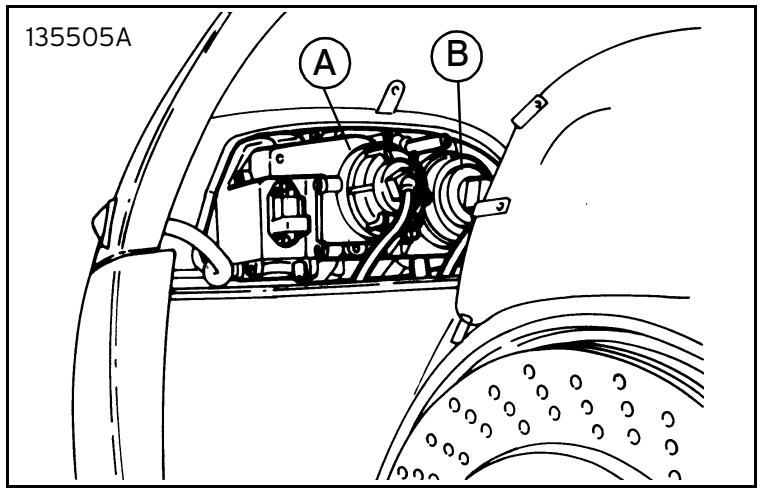

Fig. 2 - Dipper headlight and main beam light

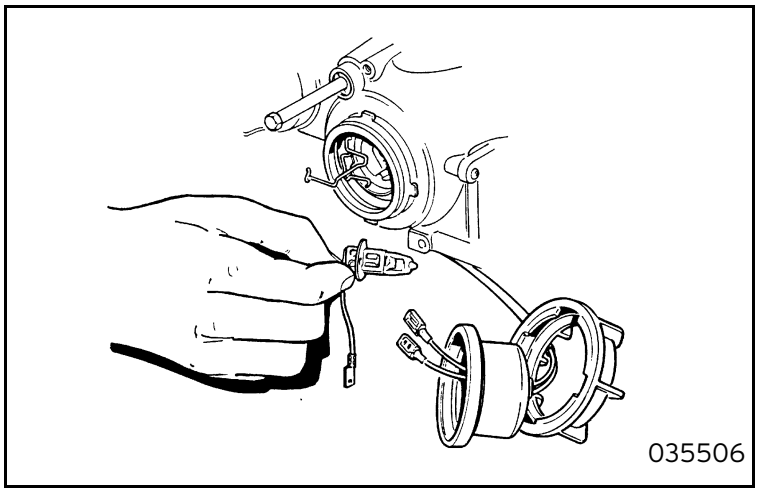

Fig. 3 - Dipper headlight bulb replacement

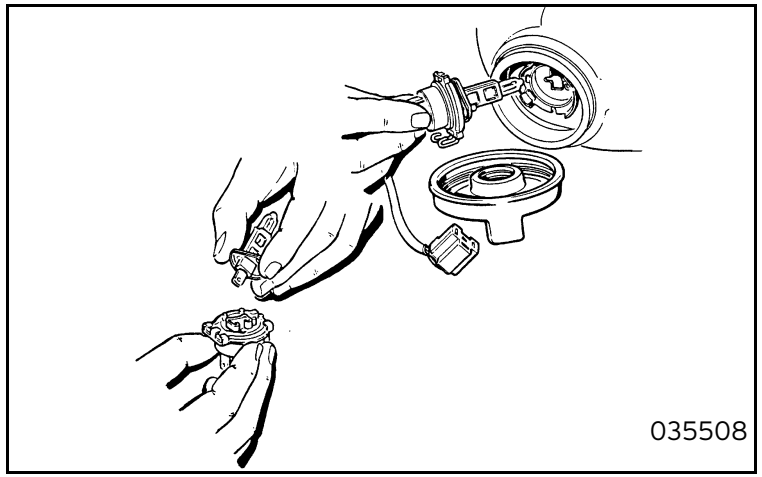

Fig. 4 - Main beam bulb replacement

Front parking light and turn signal cluster
The fog lamps and flash lights are located on the front spoiler and fixed at the rear.
Remove the spoiler lower cover to access the rear of the projectors.
Remove the rubber boot and/or the ringnut then disengage the clips to remove the burnt-out bulb and replace it.

Brake side lights and rear turn/reversing cluster (A)
Rear side/brake lights and fog lamp cluster (B)
To reach the bulbs of these light clusters remove the fastening screws, take off the lenses then remove the bulb to be replaced.

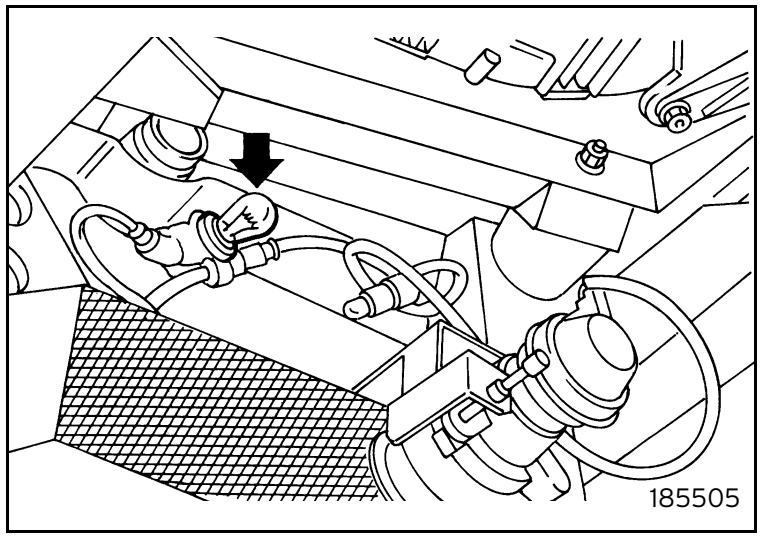

Fig. 5 - Front side light and turn indicators cluster

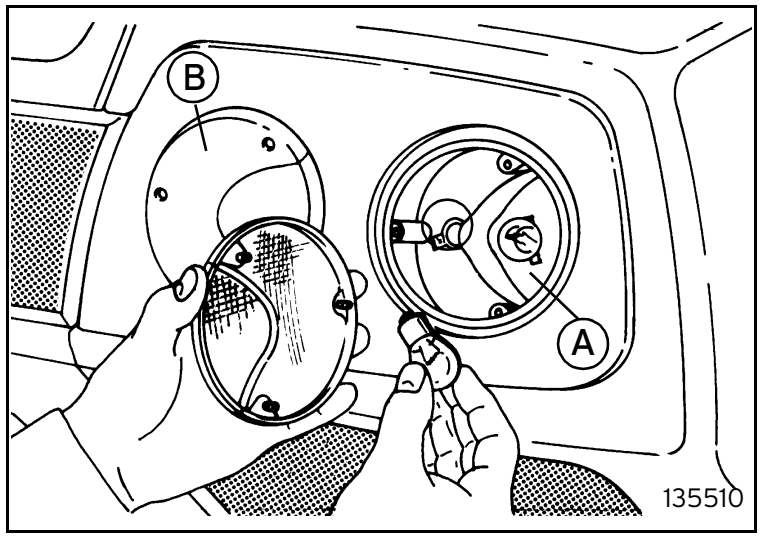

Fig. 6 - Brake/taillights and rear turn/reversing cluster (A)
Tail-/brake lights and rear fog lamp cluster (B)

Number plate light

To reach these bulbs remove the two screws, remove the lens then remove the bulb.

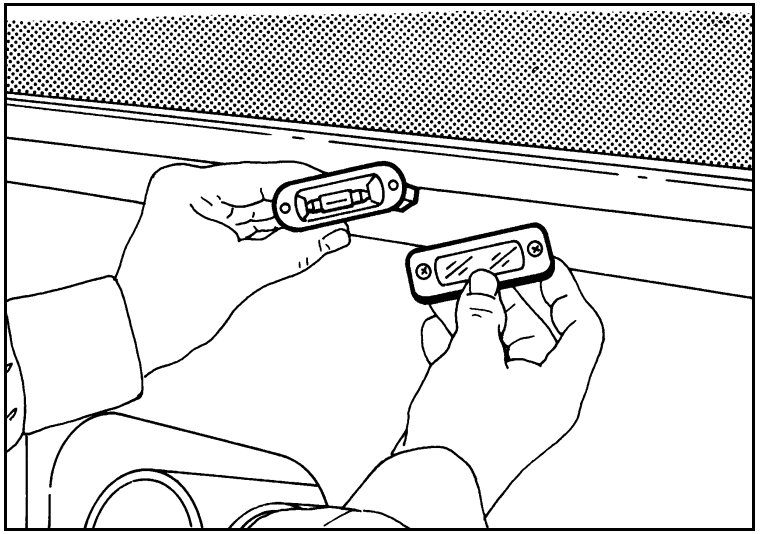

Fig. 7 - Number plate light

Side turn indicators/front side markers (USA)
To reach the bulbs of the side turn indicators or front side markers (USA) remove the rectangular bulkhead on the front wheel housing.
When the rubber hood is reached, remove it and replace the bulb.

Rear side markers (USA)
To reach these bulbs remove the two securing screws and take out the cooling air outlet grid of the water radiator.
When the rubber hood is reached sideways, near the rear bumpers, remove it and replace the burnt out bulb.

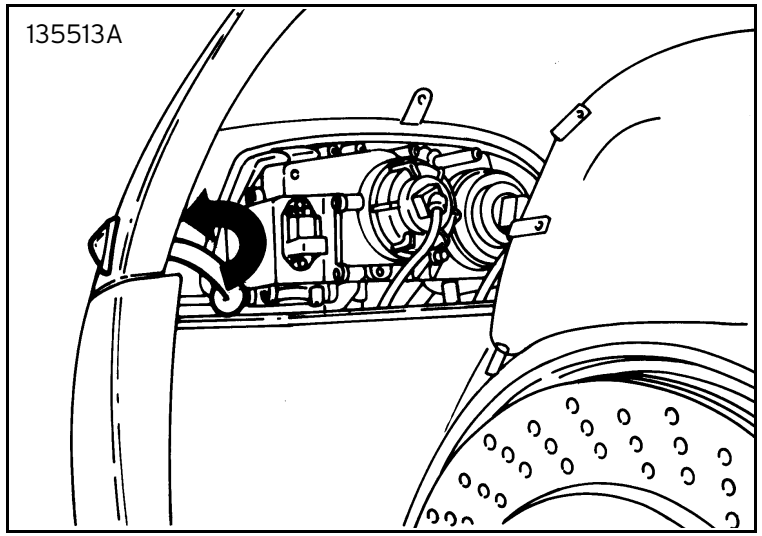

Fig. 8 - Side turn indicators/front side markers (USA)

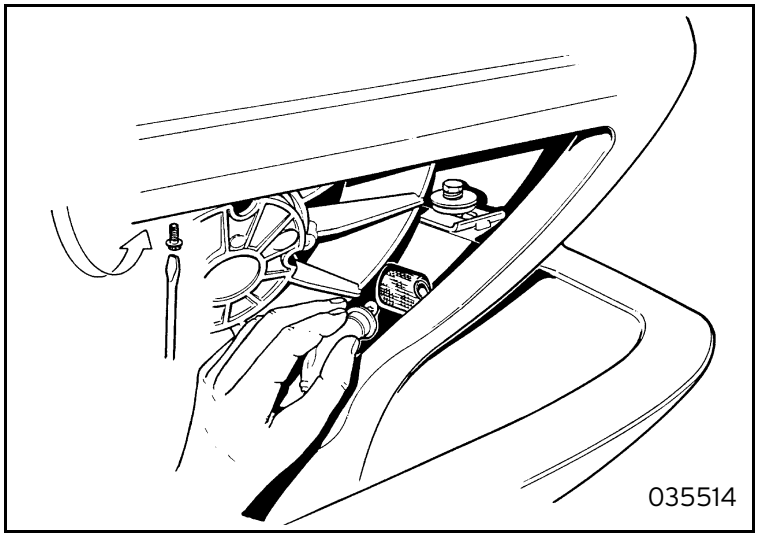

Fig. 9 - Rear side markers (USA)

Internal lights (front courtesy light)
To reach the internal light bulb remove the lens levering it with a screwdriver.
To replace the adjustable bulb disassemble the group securing lens then remove the complete ceiling light and take out the small rear lamp holder.

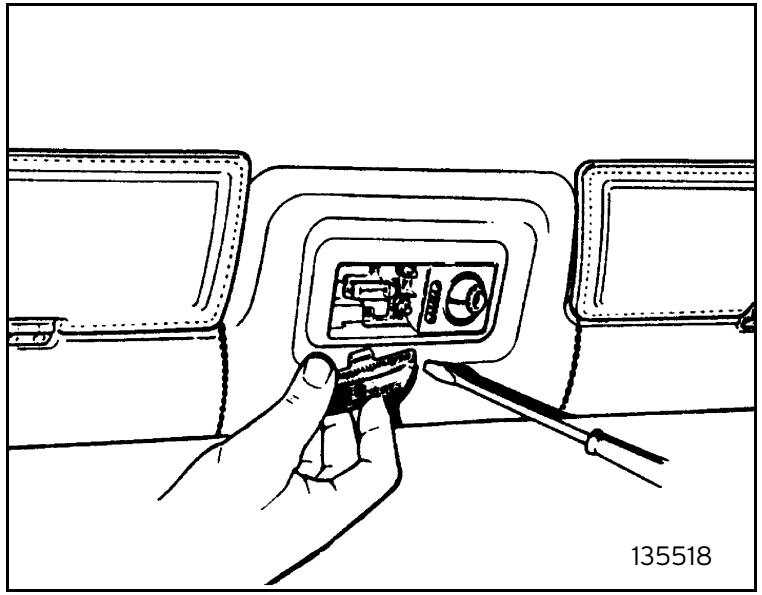

Fig. 10 - Front courtesy light

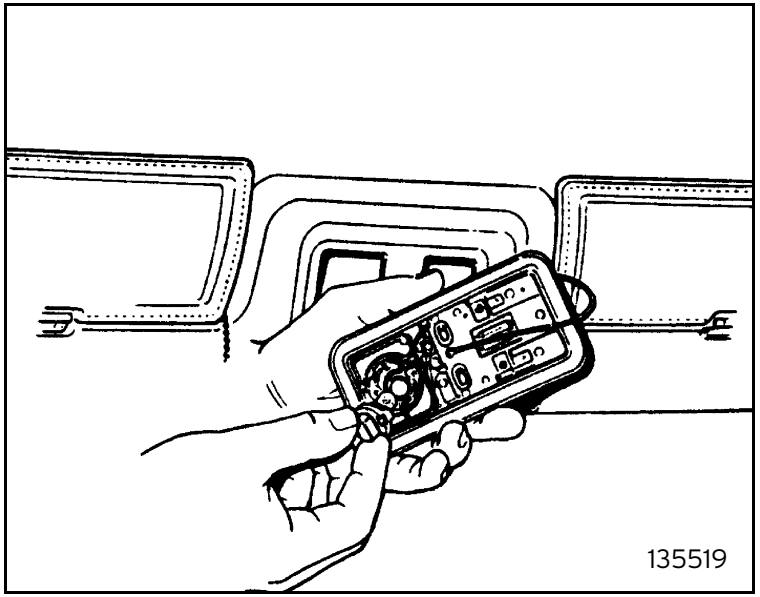

Fig. 11 - Adjustable map light

Interior light (rear courtesy light).
To access the courtesy light bulb remove the lens by prising it with a screwdriver.
To access the orientable reading light bulb remove the lens and then the entire fixture,now extract the small bulbholder at the rear.

Front compartment lights
To reach the front compartment bulb remove the lens levering it with a screwdriver.

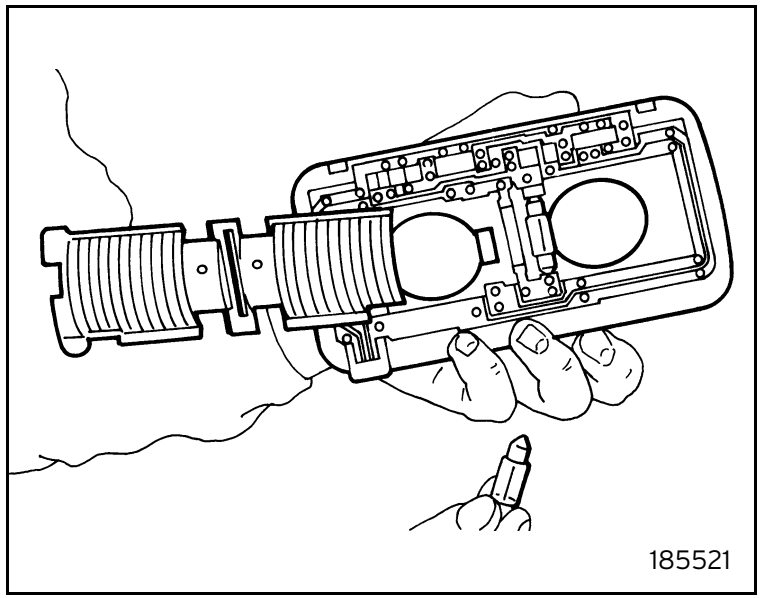

Fig. 12 - Rear courtesy light

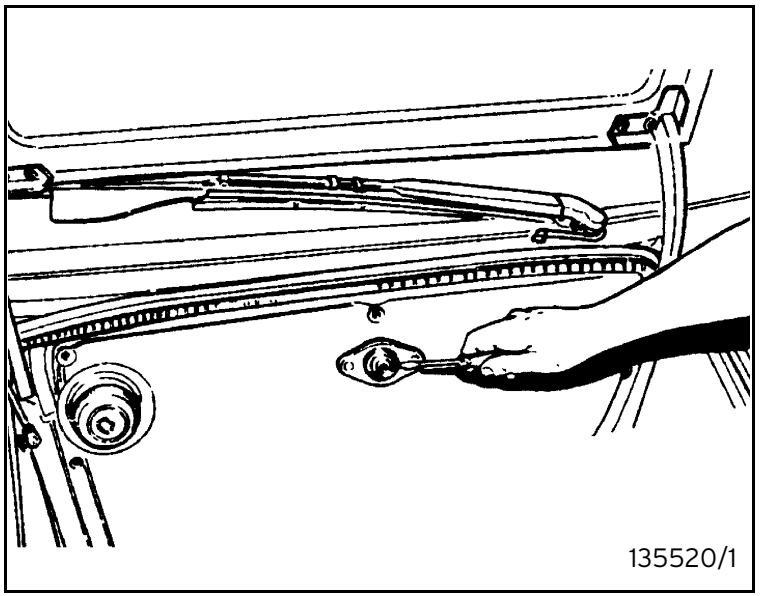

Fig. 13 - Front compartment light

Headlight beam adjustment (EEC vehicles)
The adjustment of the light beam must comply to the laws in force.
To carry out this operation it is recommended to use the appropriate equipment.
However, adjustment can be made proceeding as follows:

- take the unladen vehicle, with the tyres at the prescribed pressure, on level ground in front of a screen in the shade;
- on the screen mark crosses that correspond to the centre of the headlights;
- take the car back 10 metres and switch on the dipped headlights; reference points P-P should be under the crosses in a range of 1/10th of the distance between the ground level and the crosses.

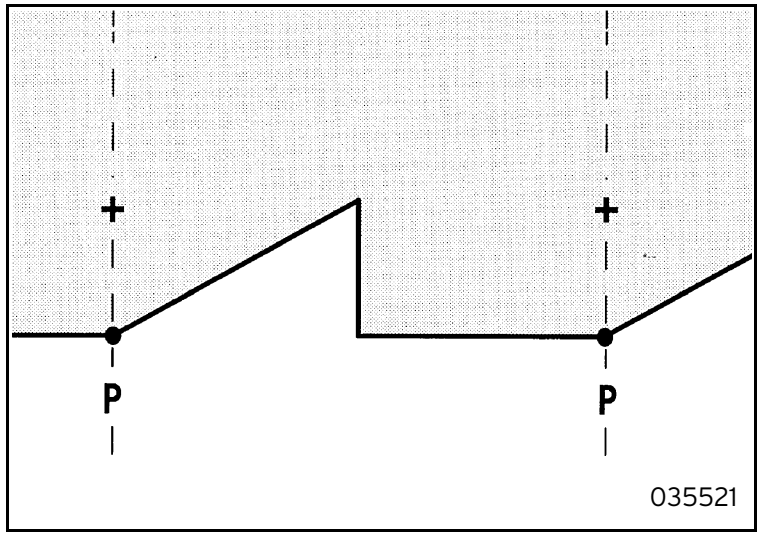

Fig. 14 - Headlight adjustment diagram

Access the headlight adjustment screws as indicated in the figure.
Adjust through the adjustment screws.

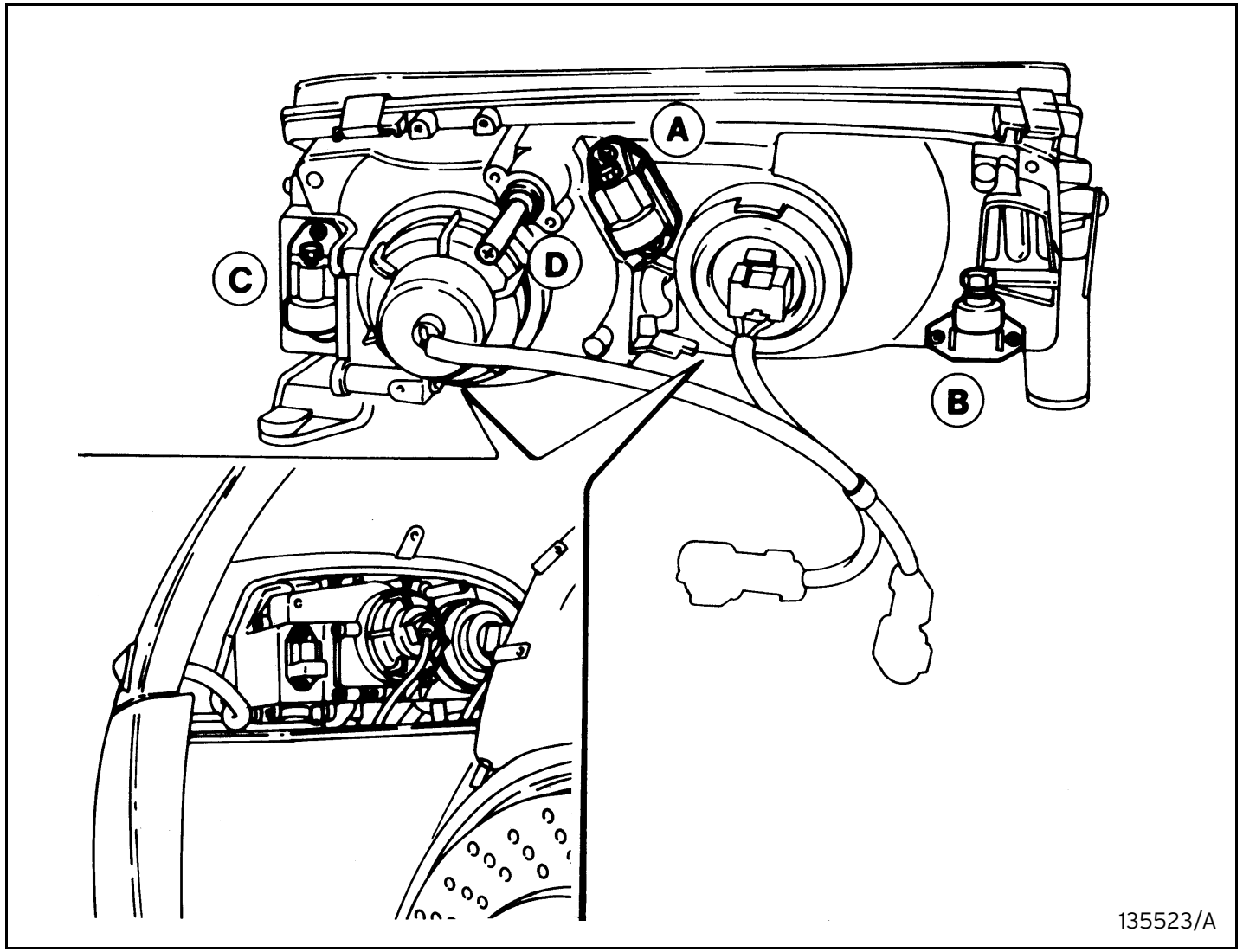

Fig. 15 - Headlight adjustment screw

main beam light
A: light beam horizontal adjustment screw
B: light beam vertical adjustment screw

dipped headlight:
C: light beam horizontal adjustment screw
D: light beam vertical adjustment screw

Headlight beam adjustment (USA vehicles)
Access the cluster adjustment screws as indicated in the figure.
Adjust through the adjustment screws.

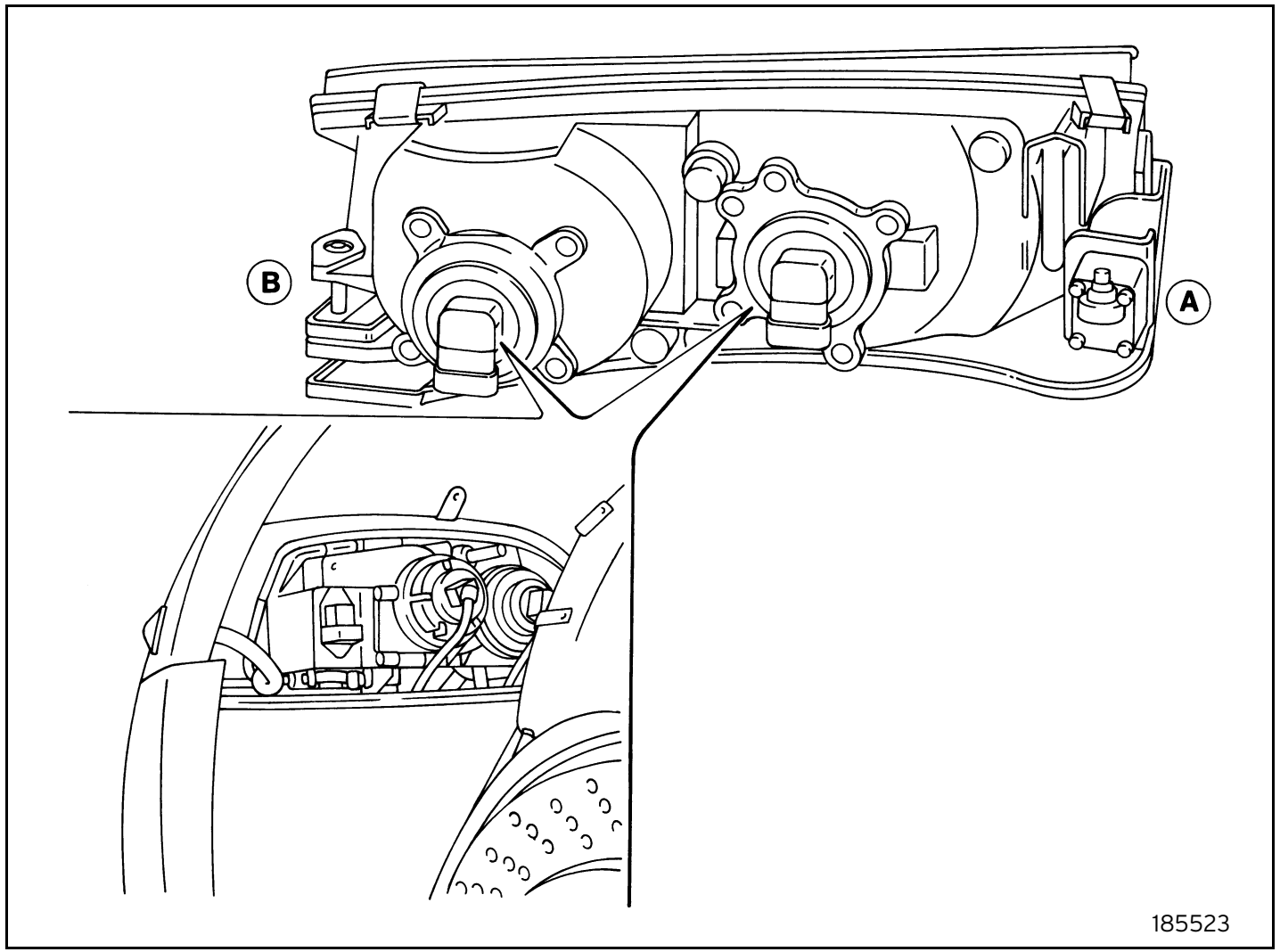

A: light beam horizontal adjustment screw
B: light beam vertical adjustment screw

Fig. 16 - Cluster adjustment screw